FURUNO

OPERATOR'S MANUAL

NAVTEX RECEIVER

MODEL NX-700A/B

FURUNO ELECTRIC CO., LTD.

www.furuno.co.jp

(Elemental Chlorine Free)

The paper used in this manual
is elemental chlorine free.

© FURUNO ELECTRIC CO., LTD.

9-52 Ashihara-cho,
Nishinomiya, 662-8580, JAPAN

Telephone : +81-(0)798-65-2111
Fax : +81-(0)798-65-4200

・FURUNO Authorized Distributor/Dealer

All rights reserved. Printed in Japan

A : MAY 2005
D1 : MAY 21, 2007

Pub. No. OME-56490-D1

(TATA) NX-700A/B

00015280413

IMPORTANT NOTICE

- No part of this manual may be copied or reproduced without written permission.
- If this manual is lost or worn, contact your dealer about replacement.
- The contents of this manual and equipment specifications are subject to change without notice.
- The example screens (or illustrations) shown in this manual may not match the screens you see on your display. The screen you see depends on your system configuration and equipment settings.
- This manual is intended for use by native speakers of English.
- FURUNO will assume no responsibility for the damage caused by improper use or modification of the equipment or claims of loss of profit by a third party.
- Please carefully read and follow the operation and maintenance procedures set forth in this manual.
- Store this manual in a convenient place for further reference.

⚠ SAFETY INSTRUCTIONS

Safety information for the Operator

⚠ WARNING

ELECTRICAL SHOCK HAZARD
Do not open the equipment.

Only qualified personnel should work inside the equipment.

Do not disassemble or modify the equipment.

Fire, electrical shock or serious injury can result.

Immediately turn off the power at the switchboard if the equipment is emitting smoke or fire.

Continued use of the equipment can cause fire or electrical shock. Contact a FURUNO agent for service.

Keep heater away from equipment.

A heater can melt the equipment's power cord, which can cause fire or electrical shock.

Use the proper fuse.

Fuse rating is shown on the equipment. Use of a wrong fuse can result in damage to the equipment.

⚠ CAUTION

A warning label is attached to the equipment. Do not remove the label. If the label is missing or damaged, contact a FURUNO agent or dealer about replacement.

⚠ WARNING ⚠
To avoid electrical shock, do not remove cover. No user-serviceable parts inside.

Name: Warning Label (1)
Type: 86-003-1011-1
Code No.: 100-236-231

Safety information for the Installer

⚠ WARNING

Do not open the equipment unless totally familiar with electrical circuits and service manual.

ELECTRICAL SHOCK HAZARD

Only qualified personnel should work inside the equipment.

Turn off the power at the mains switch-board before beginning the installation.

Fire, electrical shock or serious injury can result if the power is left on or is applied while the equipment is being installed.

⚠ CAUTION

Observe the following compass safe distances to prevent deviation of a magnetic compass.

		Standard	Steering
Display unit	NX-700A	1.45 m	0.95 m
	NX-700B	0.30 m	0.30 m
Receiver unit NX-7001		1.15 m	0.75 m

Attach securely protective earth to the ship's body.

The protective earth is required to the power supply to prevent electrical shock.

FORWORD

Congratulations on your choice of the FURUNO NX-700A/B NAVTEX Receiver. We are confident that you will enjoy many years of operation with this fine piece of equipment.

For over 50 years, Furuno Electric Company has enjoyed an enviable reputation for quality and reliability throughout the world. Our extensive global network of agents and dealers furthers this dedication to excellence.

The NX-700A/B is just one of the many Furuno developments in the field of marine radio communication.
NX-700A: Display unit w/printer
NX-700B: Display unit w/o printer

This NX-700A/B provides cost-effective price, high sensitivity and simple operation in one compact and light-weight unit. In addition to its fundamental function of receiving NAVTEX broadcasts, this unit can also function as nav data display when connected to navigation equipment.
This unit is designed and constructed to ensure the user many years of trouble-free operation. To obtain full performance from the equipment, however, you should carefully read and follow the recommended procedures for installation, operation and maintenance. No machine can perform its intended functions unless it is installed and maintained properly.

Thank you for considering and purchasing FURUNO equipment.

Features

NAVTEX (Navigational Telex) is a world wide coastal telex broadcasting system. Coastal NAVTEX broadcasting stations with specific ID's transmit Navigational warnings. Meteorological warnings, Search and Rescue (SAR) information and other navigational information for NAVTEX receiver-equipped vessels sailing in coastal waters.

The FURUNO NX-700 NAVTEX receiver receives NAVTEX messages and automatically displays them together with station ID and message category information.

If ship's position data is fed from navigation equipment, the NX-700 automatically decides in which NAVAREA the vessel is navigating, and selects stations. (NAVAREAs are geographical zones defined by the international Maritime Organization.)

-Meets the following standards and regulations
MSC.148 (77) IMO A.694 (17)
IEC61097-6 Ed. 2 (2005-12)

IEC 60945 Ed. 3 and 4
IEC 61162-1 and 2
EN 300 065 V 1.1.3
EN 301 011 V 1.1.1 (1998-09)
ITU-R M.540-2
ITU-R M.625-3

-Receives 518 kHz and another (490 or 4209.5 kHz) at the same time

-5" LCD display

-Prints out the message selected

-Bright 76 x 100 mm, monochrome LCD, 240 x 320 dots with adjustable contrast and brilliance

-Low power consumption

-Displays the NAV data (date, own ship's position, speed and course) or distance (distance between own ship's position and information mentioned in the message) at the bottom of screen

TABLE OF CONTENTS

EQUIPMENT LISTS viii

SYSTEM CONFIGURATIONS x

1. PRINCIPLE OF NAVTEX SYSTEM 1-1
- 1.1 How NAVTEX Works 1-1
- 1.2 NAVTEX System Operation 1-1
- 1.3 Message Format 1-2
- 1.4 NAVTEX Station Map 1-3
- 1.5 NAVTEX Station List 1-4

2. OPERATION 2-1
- 2.1 Operating Controls 2-1
- 2.2 Turn the Unit On/Off 2-1
- 2.3 Adjusting LCD Dimmer 2-2
- 2.4 Confirming the New Message 2-3
- 2.5 Sample Messages 2-4
- 2.6 Choosing the Receive Mode 2-5
- 2.7 Choosing the Local Frequency 2-6
- 2.8 Editing the Setting for Station and Message 2-6
- 2.9 Switching the Frequency to Display 2-8
- 2.10 Alarm Messages 2-8
- 2.11 Processing Messages 2-9
- 2.12 Printing Messages 2-11
- 2.13 Editing the NAVTEX Station List 2-12
- 2.14 Icons 2-15
- 2.15 Messages List 2-16
- 2.16 Other Functions 2-17

3. MAINTENANCE & TROUBLESHOOTING 3-1
- 3.1 Maintenance 3-1
- 3.2 Replacement of Fuse, Battery and Thermal Paper 3-2
- 3.3 Troubleshooting 3-4
- 3.4 Diagnostics 3-5
- 3.5 Restoring All Default Settings 3-6

4. INSTALLATION 4-1
- 4.1 Display Unit 4-1
- 4.2 Receiver Unit 4-3
- 4.3 Antenna Unit 4-4
- 4.4 Printer (NX-700B only) 4-5
- 4.5 Wiring 4-5
- 4.6 Setting of Printer 4-10
- 4.7 Digital Interfacing 4-11

MENU TREE **AP-1**

SPECIFICATIONS **SP-1**

PACKING LISTS **A-1**

OUTLINE DRAWINGS **D-1**

INTERCONNECTION DIAGRAM **S-1**

EQUIPMENT LISTS

Standard Supply

Name	Type	Code No.	Qty	Remarks
Display Unit	NX-700A	-	1	w/printer
	NX-700B	-		w/o printer
Receiver Unit	NX-7001	-	1	
Antenna Unit	NX-7H	-	1	
Installation Materials	CP08-01810	000-040-180	1	10 m cable, CP08-01811
	CP08-01820	000-040-210		20 m cable, CP08-01811*
	CP08-01870	000-040-350		30 m cable, CP08-01811*
	CP08-01880	000-040-362		40 m cable, CP08-01811*
	CP08-01890	000-040-363		50 m cable, CP08-01811*
	CP08-01860	000-040-349	1	DSUB25P cable, between Display and Receiver Units
	CP08-01863*	004-514-530	1	For Antenna Unit w/o antenna cable
	CP08-01864*	004-514-540		For Antenna Unit w/ antenna cable.
	CP08-01861*	004-514-350	1	For Display Unit
Spare Parts	SP08-02101*	004-514-370	1	Fuse for Receiver Unit*
Accessories	FP08-00800*	000-040-396	1	For NX-700A

*: See the back of this manual.

Optional Supply

Name	Type	Code No.	Qty	Remarks
Thermal Paper	TP058-30CL	000-154-047	1 set	For NX-700A
Flush Mount Kit	OP08-19	004-515-260	1	For NX-700A
	OP08-20	004-515-270	1	For NX-700B
AC-DC Power	PR-240	000-053-373	1	
Extension Cable Kit	OP04-2	000-041-174	1	10 m, w/connector
		000-041-175	1	20 m, w/connector
		000-041-176	1	30 m, w/connector
		000-041-177	1	40 m, w/connector
		000-041-178	1	50 m, w/connector
	OP08-12	005-948-250	1	10 m
		005-948-260	1	20 m
		005-948-270	1	30 m
		005-948-280	1	40 m
		005-948-290	1	50 m
Coaxial Cable	RG-10/U-Y	000-563-048	1	30 m
		000-126-000	1	40 m
		000-126-001	1	50 m
Cable Assy	DSUB25P-DSUB25P	000-152-698	1	3 m
		000-152-699	1	5 m
		000-152-700	1	10 m
		000-152-701	1	15 m
Right Angle Mounting Base	No.13-QA330	000-803-239	1	For antenna unit NX-7H
L-Angle Mounting Base	No.13-QA310	000-803-240	1	
Handrail Mounting Base	No.13-RC5160	000-806-114	1	
Mast Mounting Kit	CP20-01111	004-365-780	1	
Display Unit	NX-700A	-	1	
	NX-700B	-		

SYSTEM CONFIGURATIONS

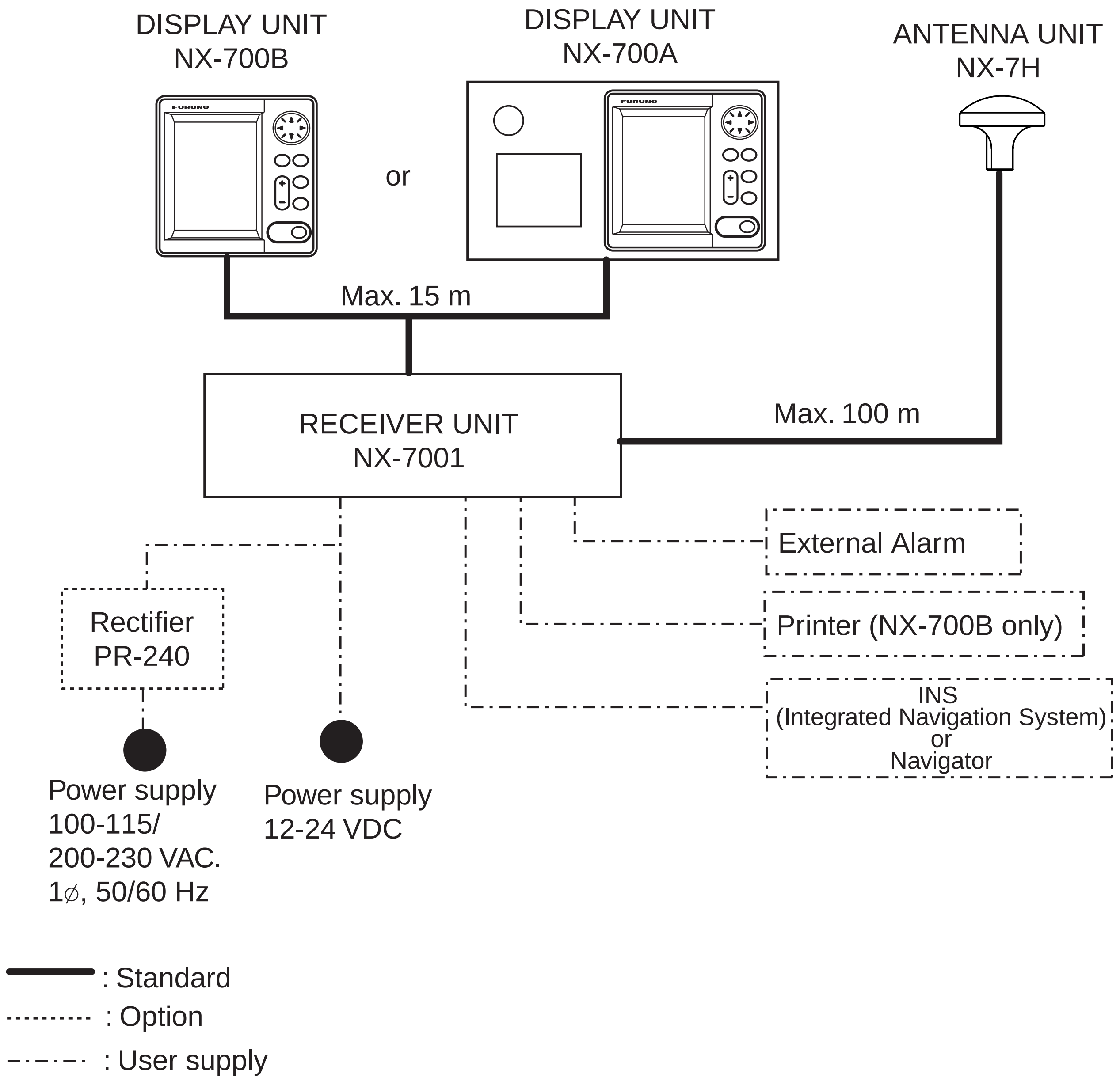

Environmental Category

Antenna unit	To be installed in an exposed area
Display unit Receiver unit	To be installed in a protected area

1. PRINCIPLE OF NAVTEX SYSTEM

1.1 How NAVTEX Works

NAVTEX is an acronym meaning Navigational Telex, and as its name shows, it is a kind of narrow band radio teletype system for sending (by frequency shift keying) text messages expressed in a 7-unit code. The difference is that a NAVTEX transmitter transmits nine control characters (header code) ahead of the main message, so that the receiver can identify the station, message type and serial number automatically.

1.2 NAVTEX System Operation

For navigation purposes, the world is divided into 16 areas as shown in the figure below. Each Navtex station has an identification code, from “A” to “Z”. The frequency assigned to Navtex are 518 kHz and another (490 or 4209.5 kHz), and many stations exist in the same service coverage.

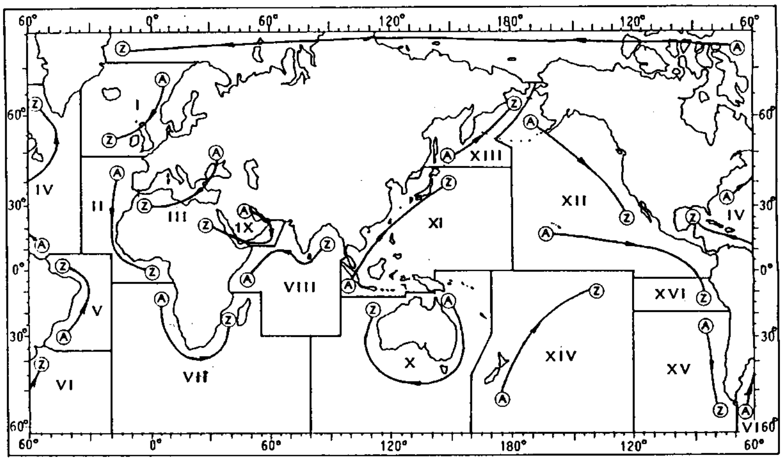

If the stations were to transmit without any rule, the system would collapse due to mutual interference. To avoid this problem, the following rules apply.

- The transmission schedule is determined so that two or more stations having a common service area may not overlap in time.
- Each station transmits with minimum required power to cover its service area (200 to 400 nautical miles nominal).

1.3 Message Format

For automatic identification of messages, each message starts with nine control characters, called “Header codes”.
The first five characters are always “ZCZC_“ and common to all messages. This part is used for message synchronization. The latter four characters are designed as B1, B2, B3 and B4 indicate origin, category and serial number of the message.
Character B1 is the identification letter of the Navtex station “A” thru “Z”.
Character B2 indicates the type of message. “A” thru “Z”, as listed below.
Character B3 and B4 indicate the serial number of the message. The serial numbers are counted up from “01” to “99”, and starts from “01” again. Number “00” is specially reserved for important emergency messages.

The end of each message is indicated by “NNNN” (four successive N’s).
General message format is summarized below.

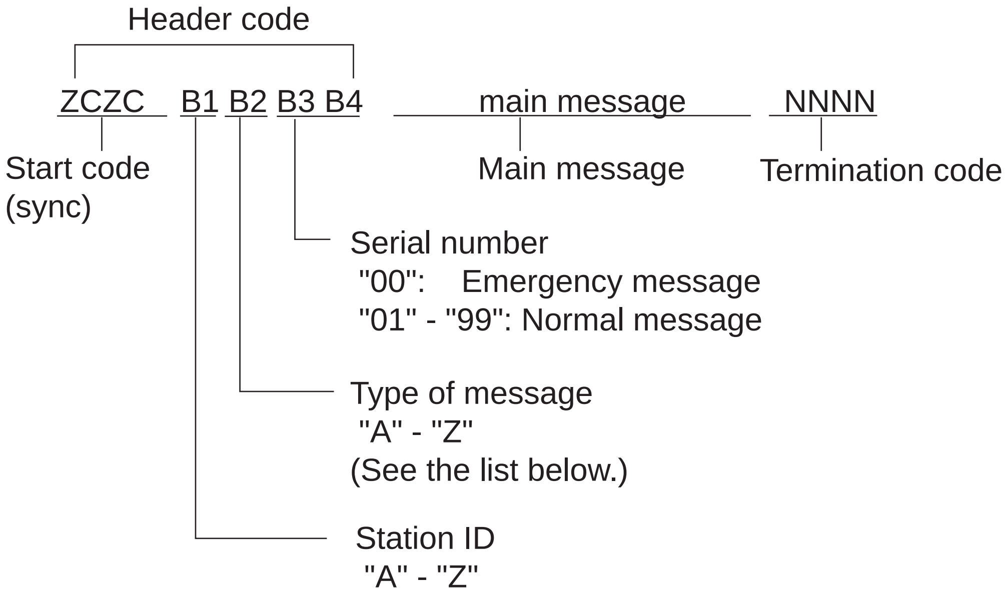

[Type of message (category)]

A:	navigational warning	I:	reserved presently not used
B:	meteorological warning	J:	SATNAV message
C:	ice report	K:	other electronic navigational aid system message
D:	search and rescue information/piracy and armed robbery	L:	navigational warning (additional)
E:	meteorological forecast	M to Y:	reserved presently not used
F:	pilot message		
G:	AIS		
H:	LORAN-C message	Z:	QRU (no message on hand)

1.4 NAVTEX Station Map

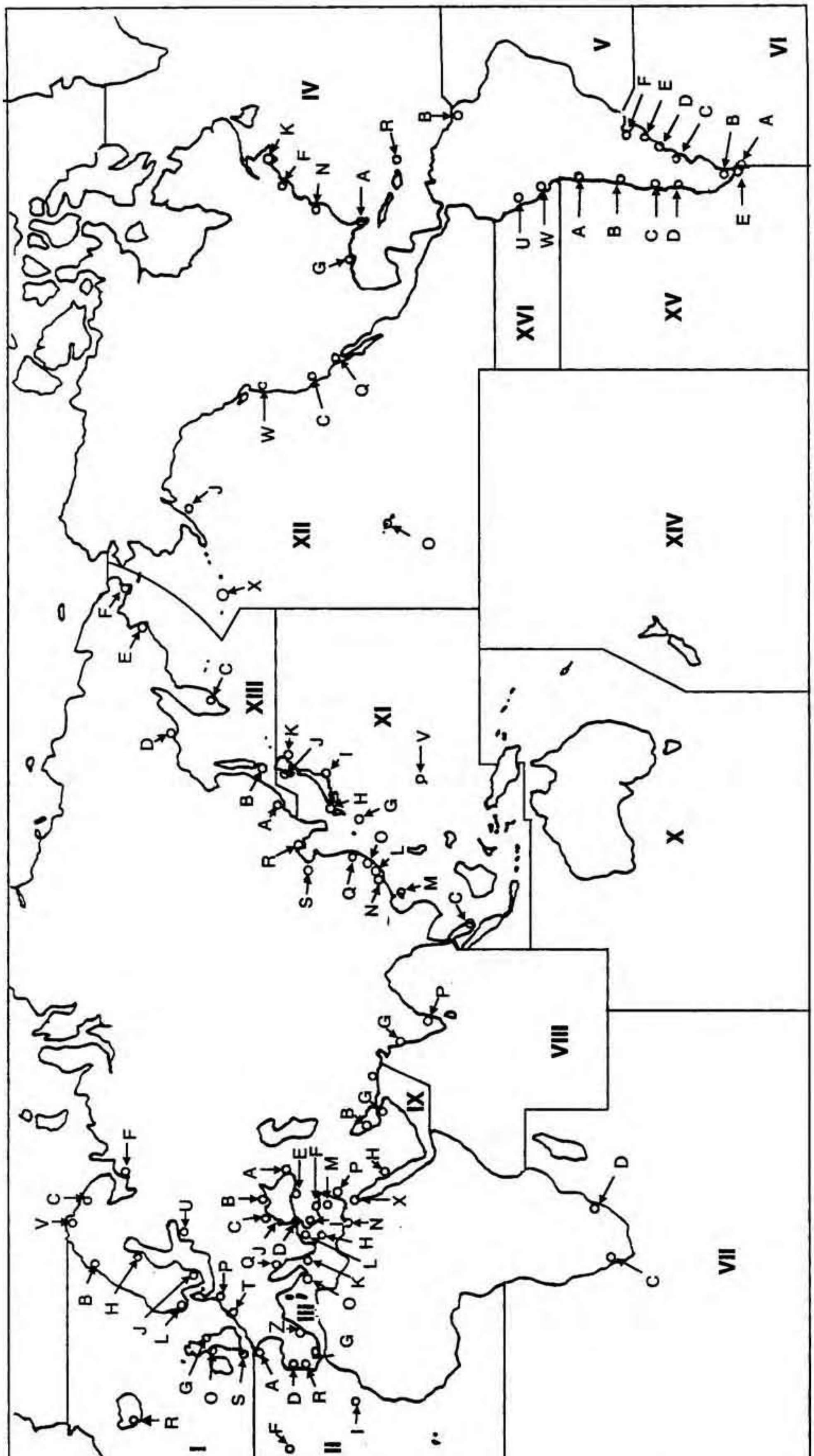

1.5 NAVTEX Station List

NAV area	Country	Station	Latitude	Longitude	Freq. (kHz)	Area (nm)	Station ID	Broadcast schedule (UTC)
I	Belgium	Oostende	51 11 N	02 48 E	518	55	T	0310, 0710, 1110, 1510, 1910, 2310
	Estonia	Tallinn	59 30 N	24 30 E	518	250	U	0320, 0720, 1120, 1520, 1920, 2320
	Iceland	Reykjavik Radio	64 05 N	21 51 W	518	550	R	0250, 0650, 1050, 1450, 1850, 2250
					490	550	R	0318, 0718, 1118, 1518, 1918, 2318
	Ireland	Valentia	51 27 N	09 49 W	518	400	W	0340, 0740, 1140, 1540, 1940, 2340
		Malin Head	55 22 N	07 21 W	518	400	Q	0240, 0640, 1040, 1440, 1840, 2240
	France	Niton	50 35 N	01 18 W	518	270	K	0140, 0540, 0940, 1340, 1740, 2140
	Netherlands	Den Helder	52 06 N	04 15 E	518	110	P	0230, 0630, 1030, 1430, 1830, 2230
	Norway	Bodo Radio	67 16 N	14 23 E	518	450	B	0010, 0410, 0810, 1210, 1610, 2010
		Rogaland Radio	58 48 N	05 34 E	518	450	L	0150, 0550, 0950, 1350, 1750, 2150
		Vardoe Radio	70 22 N	31 06 E	518	450	V	0330, 0730, 1130, 1530, 1930, 2330
		Svalbard	78 04 N	13 38 E	518	450	A	0000, 0400, 0800, 1200, 1600, 2000
		Orlandet	63 40 N	09 33 E	518	450	N	0210, 0610, 1010, 1410, 1810, 2210
	Sweden	Bjuroklubb	64 28 N	21 36 E	518	300	H	0110, 0510, 0910, 1310, 1710, 2110
		Gislovshammar	55 29 N	14 19 E	518	300	J	0130, 0530, 0930, 1330, 1730, 2130
		Grimeton	57 06 N	12 23 E	518	300	D	0030, 0430, 0830, 1230, 1630, 2030
	United Kingdom	Cullercoats	55 02 N	01 26 W	518	270	G	0100, 0500, 0900, 1300, 1700, 2100
					490	270	U	0320, 0720, 1120, 1520, 1920, 2320
		Portpatrick	54 51 N	05 07 W	518	270	O	0220, 0620, 1020, 1420, 1820, 2220
					490	270	C	0020, 0420, 0820, 1220, 1620, 2020
		Niton	50 35 N	01 18 W	518	270	E	0040, 0440, 0840, 1240, 1640, 2040
					490	270	I	0120, 0520, 0920, 1320, 1720, 2120
		Oostende	51 11 N	02 48 E	518	150	M	0200, 0600, 1000, 1400, 1800, 2200
II	France	Cross Corsen	48 28 N	05 03 W	518	300	A	0000, 0400, 0800, 1200, 1600, 2000
					490	300	E	0040, 0440, 0840, 1240, 1640, 2040
		Niton	50 35 N	01 18 W	490	270	T	0310, 0710, 1110, 1510, 1910, 2310
	Portugal	Horta	38 32 N	28 38 W	518	640	F	0050, 0450, 0850, 1250, 1650, 2050
		Monsanto	38 44 N	09 11 W	518	530	R	0250, 0650, 1050, 1450, 1850, 2250
					490	530	G	0100, 0500, 0900, 1300, 1700, 2100
	Spain	Coruna	43 21 N	08 27 W	518	400	D	0030, 0430, 0830, 1230, 1630, 2030
		Tarifa	36 01 N	05 34 W	518	400	G	0100, 0500, 0900, 1300, 1700, 2100
		Las Palmas	28 10 N	15 25 W	518	400	I	0120, 0520, 0920, 1320, 1720, 2120

(Continued on next page)

NAV area	Country	Station	Latitude	Longitude	Freq. (kHz)	Area (nm)	Station ID	Broadcast schedule (UTC)
III	Bulgaria	Varna	43 04 N	27 46 E	518	350	J	0130, 0530, 0930, 1330, 1730, 2130
	Croatia	Split radio	43 30 N	16 29 E	518	85	Q	0240, 0640, 1040, 1440, 1840, 2240
	Cyprus	Cypradio	35 03 N	33 17 E	518	200	M	0200, 0600, 1000, 1400, 1800, 2200
	Egypt	Alexandria	31 12 N	29 52 E	518	350	N	0210, 0610, 1010, 1410, 1810, 2210
		Serapeum	30 28 N	32 22 E	4209.5	400	X	0750, 1150
	France	Toulon	43 06 N	05 59 E	518	250	W	0340, 0740, 1340, 1540, 1940, 2340
					490	250	S	0300, 0700, 1100, 1500, 1900, 2300
	Greece	Iraklion	35 20 N	25 07 E	518	280	H	0110, 0510, 0910, 1310, 1710, 2110
		Kerkyra	39 37 N	19 55 E	518	280	K	0140, 0540, 0940, 1340, 1740, 2140
		Limnos	39 52 N	25 04 E	518	280	L	0150, 0550, 0950, 1350, 1750, 2150
	Israel	Haifa	32 49 N	35 00 E	518	200	P	0020, 0420, 0820, 1220, 1620, 2020
	Italy	Roma	41 48 N	12 31 E	518	320	R	0250, 0650, 1050, 1450, 1850, 2250
		Augusta	37 14 N	15 14 E	518	320	V	0330, 0730, 1130, 1530, 1930, 2330
		Cagliari	39 14 N	09 14 E	518	320	T	0310, 0710, 1110, 1510, 1910, 2310
		Trieste	45 41 N	13 46 E	518	320	U	0320, 0720, 1120, 1520, 1920, 2320
	Malta	Malta	35 49 N	14 32 E	518	400	O	0220, 0620, 1020, 1420, 1820, 2220
	Russian Federation	Novorossiysk	44 42 N	37 44 E	518	300	A	0300, 0700, 1100, 1500, 1900, 2300
	Spain	Cabo de la Nao	38 43 N	00 09 E	518	300	X	0350, 0750, 1150, 1550, 1950, 2350
	Turkey	Istanbul	41 04 N	28 57 E	518	300	D	0030, 0430, 0830, 1230, 1630, 2030
		Samsun	41 17 N	36 20 E	518	300	E	0040, 0440, 0840, 1240, 1640, 2040
		Antalya	36 53 N	30 42 E	518	300	F	0050, 0450, 0850, 1250, 1650, 2050
		Izmir	38 22 N	26 36 E	518	300	I	0120, 0520, 0920, 1320, 1720, 2120
	Ukraine	Mariupol	47 06 N	37 33 E	518	280	B	0100, 0500, 0900, 1300, 1700, 2100
		Odessa	46 29 N	30 44 E	518	280	C	0230, 0630, 1030, 1430, 1830, 2230
IV	Bermuda (UK)	Bermuda	32 23 N	64 41 W	518	280	B	0010, 0410, 0810, 1210, 1610, 2010
	Canada	Riviere-au-Renard	50 11 N	66 07 W	518	300	C D	0020, 0420, 0820, 1220, 1620, 2020 0035, 0435, 0835, 1235, 1635, 2035
		Wiarton	44 20 N	81 10 W	518	300	H	0110, 0510, 0910, 1310, 1710, 2110
		St. Johns	47 30 N	52 40 W	518	300	O	0220, 0620, 1020, 1420, 1820, 2220
		Thunder Bay	48 25 N	89 20 W	518	300	P	0230, 0630, 1030, 1430, 1830, 2230
		Sydney, NS	46 10 N	60 00 W	518	300	Q J	0240, 0640, 1040, 1440, 1840, 2240 0255, 0655, 1055, 1455, 1855, 2255
		Yarmouth	43 45 N	66 10 W	518	300	U V	0320, 0720, 1120, 1520, 1920, 2320 0335, 0735, 1135, 1535, 1935, 2335

(Continued on next page)

NAV area	Country	Station	Latitude	Longitude	Freq. (kHz)	Area (nm)	Station ID	Broadcast schedule (UTC)
IV	Canada	Labrador	53 42 N	57 01 W	518	300	X	0350, 0750, 1150, 1550, 1950, 2350
		Iqaluit, NU	63 43 N	68 33 W	518	300	T	0310, 0710, 1110, 1510, 1910, 2310
					490	300	S	0300, 0700, 1100, 1500, 1900, 2300
	United States	Miami	25 37 N	80 23 W	518	240	A	0000, 0400, 0800, 1200, 1600, 2000
		Boston	41 43 N	70 30 W	518	200	F	0445, 0845, 1245, 1645, 2045, 0045
		New Orleans	29 53 N	89 57 W	518	200	G	0300, 0700, 1100, 1500, 1900, 2300
		Portsmouth	36 43 N	76 00 W	518	280	N	0130, 0530, 0930, 1330, 1730, 2130
		Isabella	18 28 N	67 04 W	518	200	R	0200, 0600, 1000, 1400, 1800, 2200
		Savannah, GA	32 08 N	81 42 W	518	200	E	0040, 0440, 0840, 1240, 1640, 2040
	Netherlands Antilles	Curacao	12 10 N	68 52 W	518	400	H	0110, 0510, 0910, 1310, 1710, 2110
V	NIL							
VI	Argentina	Ushaia	54 48 S	68 18 W	518	280	M	0200, 0600, 1000, 1400, 1800, 2200
		Rio Gallegos	51 37 S	65 03 W	518	280	N	0210, 0610, 1010, 1410, 1810, 2210
		Comodoro Rivadavia	45 51 S	67 25 W	518	280	O	0220, 0620, 1020, 1420, 1820, 2220
		Bahia Blanca	38 43 S	62 06 W	518	280	P	0230, 0630, 1030, 1430, 1830, 2230
		Mar del Plata	38 03 S	57 32 W	518	280	Q	0240, 0640, 1040, 1440, 1840, 2240
		Buenos Aires	34 36 S	58 22 W	518	560	R	0250, 0650, 1050, 1450, 1850, 2250
	Uruguay	La Paloma	34 40 S	54 09 W	518	280	F	0050, 0450, 0850, 1250, 1650, 2050
					490	280	A	0000, 0400, 0800, 1200, 1600, 2000
VII	Namibia	Walvis Bay	23 03 S	14 37 E	518	378	B	0010, 0410, 0810, 1210, 1610, 2010
	South Africa	Cape Town	33 40 S	18 43 E	518	500	C	0020, 0420, 0820, 1220, 1620, 2020
		Port Elizabeth	34 02 S	25 33 E	518	500	I	0120, 0520, 0920, 1320, 1720, 2120
		Durban	30 00 S	31 30 E	518	500	O	0220, 0620, 1020, 1420, 1820, 2220
VIII	India	Mumbay	19 05 N	72 50 E	518	250	G	0100, 0500, 0900, 1300, 1700, 2100
		Madras	13 08 N	80 10 E	518	400	P	0230, 0630, 1030, 1430, 1830, 2230
	Mauritius	Mauritius Radio	20 10 S	57 28 E	518	400	C	0020, 0420, 0820, 1220, 1620, 2020
IX	Bahrain	Hamala	26 09 N	50 28 E	518	300	B	0010, 0410, 0810, 1210, 1610, 2010
	Egypt	Serapeum	30 28 N	32 22 E	518	200	X	0350, 0750, 1150, 1550, 1950, 2350
					4209.5	200	X	0750, 1150
		Kosseir	26 06 N	34 17 E	518	400	V	0330, 0730, 1130, 1530, 1930, 2330
	Iran	Bushehr	28 59 N	50 50 E	518	300	A	0000, 0400, 0800, 1200, 1600, 2000
		Bandar Abbas	27 07 N	56 04 E	518	300	F	0050, 0450, 0850, 1250, 1650, 2050

(Continued on next page)

NAV area	Country	Station	Latitude	Longitude	Freq. (kHz)	Area (nm)	Station ID	Broadcast schedule (UTC)
IX	Saudi Arabia	Jeddah	21 23 N	39 10 E	518	390	H	0705, 1305, 1905
	Oman	Muscat	23 36 N	58 30 E	518	270	M	0200, 0600, 1000, 1400, 1800, 2200
	Pakistan	Karachi	24 51 N	67 03 E	518	400	P	0230, 0630, 1030, 1430, 1830, 2230
X	NIL							
XI	China	Sanya	18 14 N	109 30 E	518	250	M	0200, 0600, 1000, 1400, 2200
		Guangzhou	23 08 N	113 32 E	518	250	N	0210, 0610, 1010, 1410, 2210
		Fuzhou	26 01 N	119 18 E	518	250	O	0220, 0620, 1020, 1420, 2220
		Shanghai	31 08 N	121 33 E	518	250	Q	0240, 0640, 1040, 1440, 2240
		Dalian	38 52 N	121 31 E	518	250	R	0250, 0650, 1050, 1450, 2250
	Indonesia	Jayapura	02 31 S	140 43 E	518	300	A	0000, 0400, 0800, 1200, 1600, 2000
		Ambon	03 42 S	128 12 E	518	300	B	0010, 0410, 0810, 1210, 1610, 2010
		Makassar	05 06 S	119 26 E	518	300	D	0030, 0430, 0830, 1230, 1830, 2030
		Jakarta	06 06 S	106 54 E	518	300	E	0040, 0440, 0840, 1240, 1640, 2040
	Japan	Otaru	43 19 N	140 27 E	518	400	J	0130, 0530, 0930, 1330, 1730, 2130
		Kushiro	42 57 N	144 36 E	518	400	K	0140, 0540, 0940, 1340, 1740, 2140
		Yokohama	35 14 N	139 55 E	518	400	I	0120, 0520, 0920, 1320, 1720, 2120
		Moji	34 01 N	130 56 E	518	400	H	0110, 0510, 0910, 1310, 1710, 2110
		Naha	26 05 N	127 40 E	518	400	G	0100, 0500, 0900, 1300, 1700, 2100
	Korea, Republic of	Chukpyong	37 03 N	129 26 E	518	200	V	0330, 0730, 1130, 1530, 1930, 2330
					490	200	J	0130, 0530, 0930, 1330, 1730, 2130
		Pyongsan	35 36 N	126 29 E	518	200	W	0340, 0740, 1340, 1540, 1940, 2340
					490	200	K	0140, 0540, 0940, 1340, 1740, 2140
	Malaysia	Penang	05 26 N	100 24 E	518	350	U	0320, 0720, 1120, 1520, 1920, 2320
		Miri	04 28 N	114 01 E	518	350	T	0310, 0710, 1110, 1510, 1910, 2310
		Sandakan	05 54 N	118 00 E	518	350	S	0300, 0700, 1100, 1500, 1900, 2300
	Singapore	Singapore	01 25 N	103 52 E	518	400	C	0020-0030, 0420-0430, 0820-0830, 1220-1230, 1620-1630, 2020-2030
	Thailand	Bangkok Radio	13 43 N	100 34 E	518	200	F	0050, 0450, 0850, 1250
	United States	Guam	13 29 N	144 50 E	518	100	V	0100, 0500, 0900, 1300, 1700, 2100

(Continued on next page)

NAV area	Country	Station	Latitude	Longitude	Freq. (kHz)	Area (nm)	Station ID	Broadcast schedule (UTC)
XI	Vietnam	Ho Chi Minh City	10 47 N	106 40 E	518	400	X	0350, 0750, 1150, 1550, 1950, 2350
		Haiphong	20 44 N	106 44 E	490	400	W	0340, 1540
					4209.5	400	W	0230, 0630, 1030, 1430, 1830, 2230
		Danang	16 05 N	108 13 E	518	400	K	0140, 0540, 0940, 1340, 1740, 2140
	Taiwan	Kaohsiung	22 29 N	120 25 E	518	216	P	0230, 0630, 1030, 1430, 1830, 2230
	Associate Member of IMO	Hong Kong	22 13 N	114 15 E	518	400	L	0150, 0550, 0950, 1350, 1750, 2150
XII	Canada	Prince Rupert	54 20 N	130 20 W	518	300	D	0030, 0430, 0830, 1230, 1630, 2030
		Tofino	48 55 N	125 35 W	518	300	H	0110, 0510, 0910, 1310, 1710, 2110
	United States	San Francisco	37 55 N	122 44 W	518	350	C	0400, 0800, 1200, 1600, 2000, 2400
		Kodiak	57 46 N	152 34 W	518	200	J	0300, 0700, 1100, 1500, 1900, 2300
		Honolulu	21 22 N	158 09 W	518	350	O	0040, 0440, 0840, 1240, 1640, 2040
		Cambria	35 31 N	121 03 W	518	350	Q	0445, 0845, 1245, 1645, 2045, 0045
		Astoria	46 10 N	123 49 W	518	216	W	0130, 0530, 0930, 1330, 1730, 2130
XIII	Russian Federation	Kholmsk	47 02 N	142 03 E	518	300	B	0010, 0410, 0810, 1210, 1610, 2010
		Murmansk	68 46 N	32 58 E	518	300	C	0020, 0420, 0820, 1220, 1620, 2020
		Arkhangelsk	64 51 N	40 17 E	518	300	F	0050, 0450, 0850, 1250, 1650, 2050
		Astrakhan	45 47 N	47 33 E	518	250	W	0340, 0740, 1140, 1540, 1940, 2340
XIV	NIL							
XV	Chile	Antofagasta	23 40 S	70 25 W	518	300	A H	0400, 1200, 2000 0000, 0800, 1600
		Valparaiso	32 48 S	71 29 W	518	300	B I	0410, 1210, 2010 0010, 0810, 1610
		Talcahuano	36 42 S	73 06 W	518	300	C J	0420, 1220, 2020 0020, 0820, 1620
		Puerto Montt	41 30 S	72 58 W	518	300	D K	0430, 1230, 2030 0030, 0830, 1630
		Punta Arenas	53 09 S	70 58 W	518	300	E L	0440, 1240, 2040 0040, 0840, 1640
		Isla de Pascua	27 09 S	109 25 W	518	300	F G	0450, 1250, 2050 0050, 0850, 1650
XVI	Peru	Paita	05 05 S	81 07 W	518	200	S	0300, 0700, 1100, 1500, 1900, 2300
		Callao	12 03 S	77 09 W	518	200	U	0320, 0720, 1120, 1520, 1920, 2320
		Mollendo	17 01 S	72 01 W	518	200	W	0340, 0740, 1140, 1540, 1940, 2340

Note: The list shows the stations listed at Longwave Navtex Broadcasts (Oct. 2004).

2. OPERATION

2.1 Operating Controls

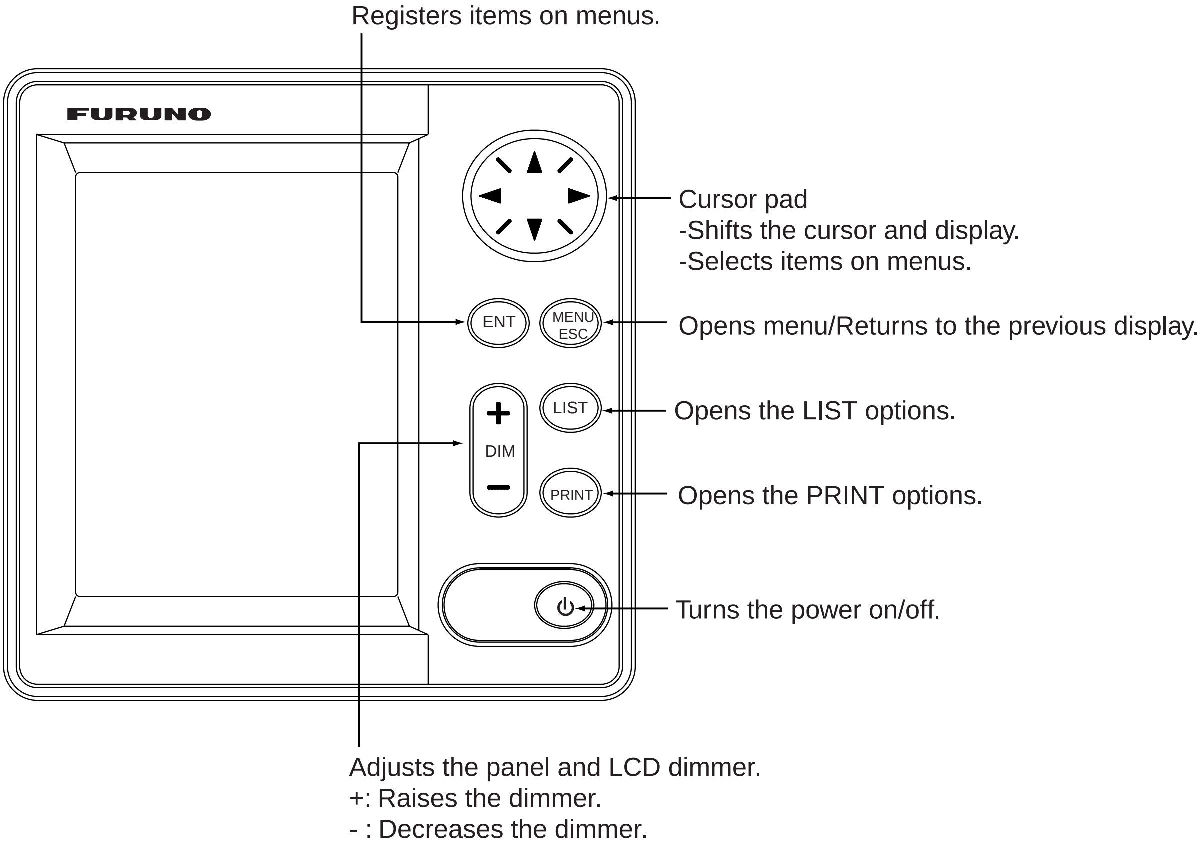

Display unit, front view

2.2 Turning the Unit On/Off

Press the ⏻ key to turn the unit on. A beep sounds and the equipment shows the start up display, where the ROM and RAM are checked for proper operation and the program no. is displayed. The results of the check are shown as OK or NG (No Good).

When the results are OK, the list display is shown after five seconds after completion of the check, with frequency last used before turning the power off.

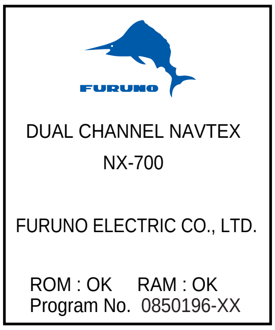

XX: Program version No.

At the default setting, the equipment functions as below;
When the results of the check are OK, ALL MESSAGE display for 518 kHz appears. This screen shows all messages received in 518 kHz.
You can switch 518 kHz (International message) and 490 kHz (local message) to display. The NX-700A is preset to print all received message out.

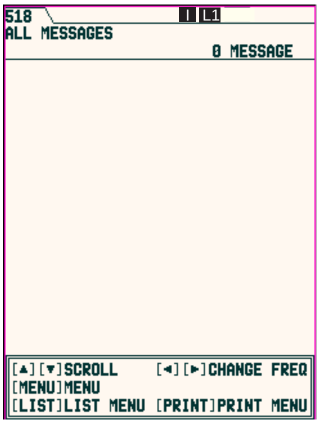

All message display (518 kHz)

Note 1: To display all received messages in 490 kHz, press ◄ or ►.
Note 2: To cancel the printing all received messages out, see page 2-11.

To turn the power off, press the ⏻ key again.

Note: If NG appears for any test, try to press any key to go to the next stage. The equipment, however, may not be operated properly. Contact your dealer if the problem persists.

2.3 Adjusting LCD Dimmer

You can adjust LCD and panel dimmer with the **+ DIM –** key. The adjustment range is 0 (dark) to 9 (bright).
+: Raises the dimmer.
-: Decreases the dimmer.

2.4 Confirming the New Message

When you receive a new message, do one of the following depending on message received.

SAR (Search and Rescue) message

1. When an SAR message is received, the audible alert sounds and details for the SAR message appear.

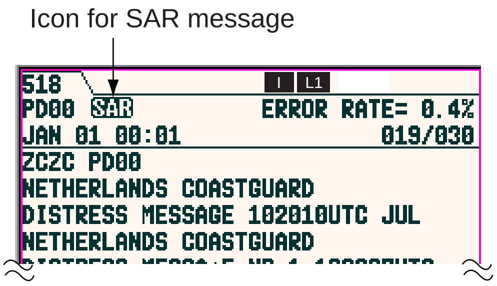

2. Press any key other than ⏻ key to silence the alarm.

Other messages

1. When a message other than an SAR message is received, the display shows one of the following windows.

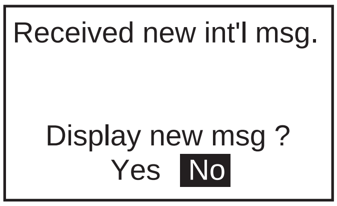

International message

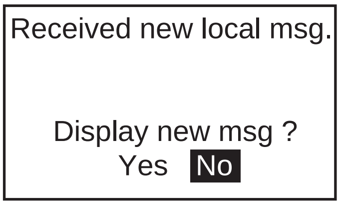

Local message

2. If you want to read the message immediately, press ◄ to choose “Yes” and then press the **ENT** key to display the message

   To read the message later, choose “No”, and then press the **ENT** key to close the window.

2.5 Sample Messages

Press ▲ or ▼ on the cursor pad to choose a message, and then press the **ENT** key to show the detailed information for that message. The message list and detailed message displays can be switched by pressing the **ENT** key.

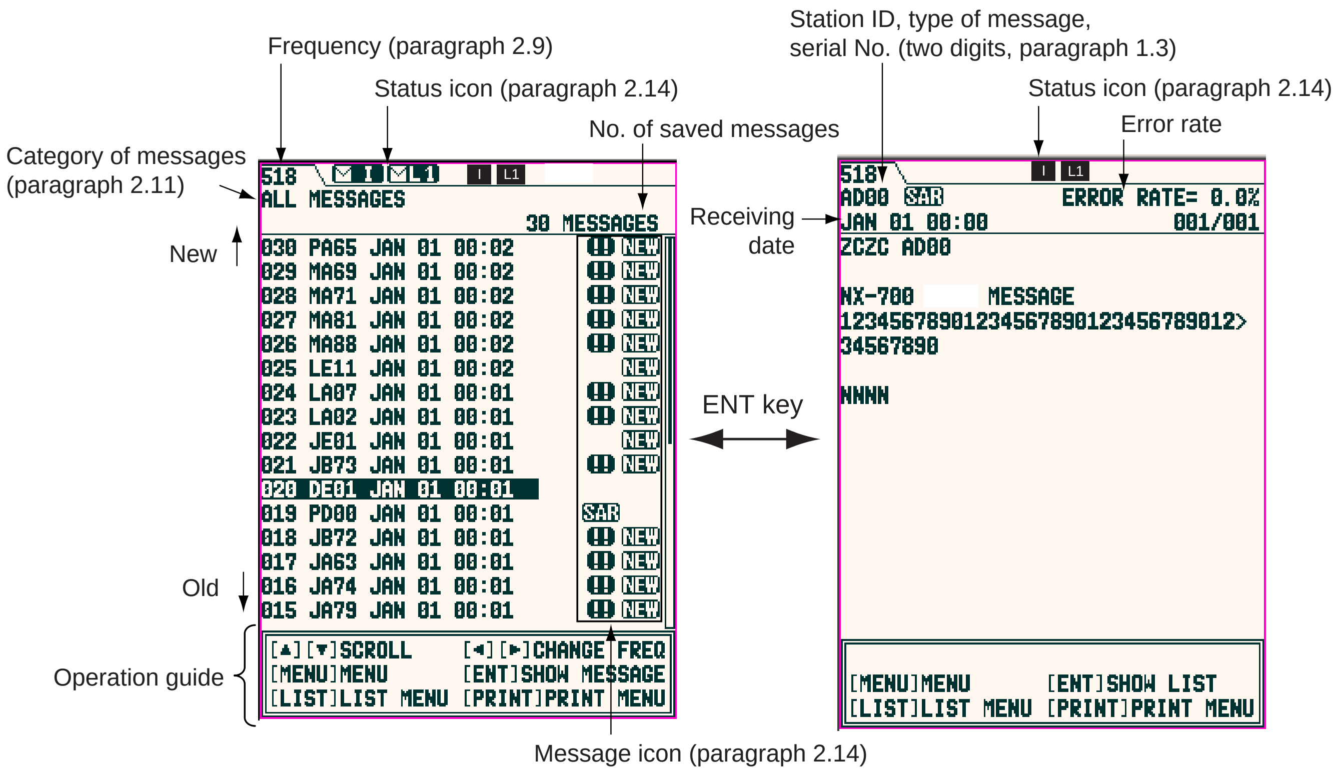

Message list *Detailed message*

Note 1: The operation guide at the bottom of screen shows the functions of the keys available for use with the current screen.
Note 2: The character size can be changed. For detail, see page 2-18.

Key	Display mode	Function
▲▼	List	Scrolls the list.
	Detailed	Scrolls the message.
◄►	List	Switches the international and local lists.
	Detailed	Shows the newer (◄) or older (►) message.
MENU	List	Shows the main menu.
	Detailed	
ENT	List	Shows the detailed message selected.
	Detailed	Shows the message list.
LIST	List	Shows the list options.
	Detailed	
PRINT	List	Shows the print options.
	Detailed	

2.6 Choosing the Receive Mode

The NAVTEX menu allows you to select what station to receive, automatically, manually. The Auto mode requires navigation data, and stations are automatically selected according to the distance between own ship and NAVTEX stations. If navigation data is not input, all stations are selected. The manual mode lets you freely stations to receive. The INS mode allows you to set the station, message and local channel from the external equipment (ex. Integrated Navigation System, using NRM or PFEC sentence) connected. Note that Manual should be chosen if you intend to not use the command from the external equipment.

1. Press the **MENU/ESC** key to show the main menu.

```
Menu

NAVTEX
System
Display
Service
```

Main menu

2. Press ▲ or ▼ to choose NAVTEX.
3. Press the **ENT** key or ► to open the NAVTEX menu.

```
NAVTEX

Mask Mode        ▶Manual
Auto Rcv Mask ▶ On
Local Channel ▶ 490kHz
Rcv Mask
INS Output Mask
Printer Mask
```

NAVTEX menu

4. Press ▲ or ▼ to choose Mask Mode, and then press the **ENT** key or ► to show the mask mode options.

```
INS
Manual
```

Mask mode options

5. Press ▲ or ▼ to choose INS (for INS mode) or Manual (for Auto or Manual mode) as appropriate, and then press the **ENT** key.
   When choosing INS, Auto Rcv Mask and Local Channel are disappeared from the NAVTEX menu.
6. For Auto and Manual modes, do the follows.
   a) Choose Auto Rcv Mask, and then press the **ENT** key.
   b) Press ▼ to choose “On” for Auto or “Off” for Manual, and then press **ENT** key.
7. Press the **MENU/ESC** key several times to close the menu.

2.7 Choosing the Local Frequency

You can choose 490 kHz or 4209.5 kHz as the local frequency on Auto or Manual mode.

1. Press the **MENU/ESC** key to show the main menu.
2. Press ▲ or ▼ to choose NAVTEX, and then press the **ENT** key or ►.
3. Press ▲ or ▼ to choose Local Channel, and then press the **ENT** key or ► to show the local channel options.

490kHz
4209.5kHz

Local channel options

4. Press ▲ or ▼ to choose the frequency 490 kHz or 4209.5 kHz, and then press the **ENT** key.
5. Press the **MENU/ESC** key several times to close the menu.

2.8 Editing the Settings for Station and Message

Stations and messages for receiving/displaying on each station (message) can be edited as below.

(NAVTEX menu)
Rcv Mask

Station
You can receive messages by station in Manual mode.

Message
You can choose the messages to receive in Manual or Auto mode. Note that A/B/D/L cannot be rejected.

INS Output Mask

You can choose the stations and messages to output to the external equipment. Note that A/B/D/L cannot be rejected.

Printer mask

Choose the type of message to be print automatically when it is received. Note that A/B/D/L cannot be rejected.

(Display Menu)
User Select Station & Msg

You can choose the type of stations and messages to display on SELECT MESSAGES display (shown by choosing “User Selected Message” after pressing **LIST** key.) For detail, see page 2-9.

1. Press the **MENU/ESC** key to show the main menu.
2. Press ▲ or ▼ to choose NAVTEX (for Rcv Mask, INS Output Mask and Printer mask) or Display (for User Select Station & Msg), and then press the **ENT** key.
3. Press ▲ or ▼ to choose “Rcv Mask”. “INS Output Mask”, “Printer Mask” or “User Select Station & Msg”.
4. Press the **ENT** key to open the appropriate editing window. (Below is the Rcv Mask editing window.)

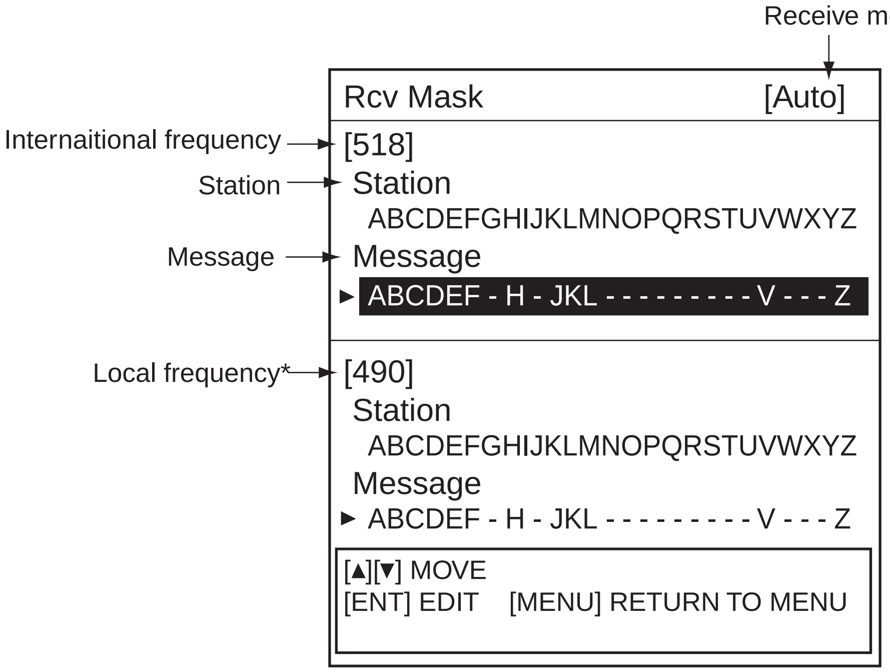

*: Local channel selected at Paragraph 2.7.

Edit window (ex. Rcv Mask)

5. Press ▲ or ▼ to choose the item to edit, and then press the **ENT** key to show the alphabet selection window.

6. Press ◄ or ► to choose the alphabet desired, and then press ▲ or ▼ to choose to receive or not.
   The alphabet you have chosen not to receive is marked with “-“ (hyphen).
7. Press the **ENT** key.
8. Repeat steps 5 through 7 to complete.
9. Press the **MENU/ESC** key to close the window.

2.9 Switching the Frequency to Display

With showing the message list, you can switch the frequency to 518 kHz or 490 (or 4209.5) kHz by pressing ◄ or ► key.

Switching the frequency to display

2.10 Alarm Messages

The sequence of events when an alarm message is received is as shown below.

When receiving SAR (Search and Rescue) message:
The audible alarm beep sounds, and the SAR message is shown. Note that All Messages list appears if other list option is chosen when the **ENT** key is pressed. (See paragraph 2.11.) The aural alarm sounds medium beep.

When receiving WARNING message (A/B/L):
When the Warn Msg Alm on System menu is set to On, the audible alarm sounds and the message for receiving appears. The aural alarm sounds long beep.

Note: When both alarms are received, the aural alarm sounds short beeps.

<u>Silencing audible alarm</u>

Press any key (except ⏻ key).

2.11 Processing Messages

Choosing messages to display

You can choose which category of messages to display: All, Alarm, User Selected and Good messages.

1. With the message list or detailed message shown, press the **LIST** key to show the list options.

All Messages
Alarm Messages
User Selected Messages
Good Messages
Lock Message

List options

2. Press ▲ or ▼ to choose the item.

   All Messages: Shows all messages received.

   Alarm Messages: Shows only SAR/WARNING messages.

   User Selected Messages: Shows messages arranged at User Select Station & Msg on Display menu.

   Good Messages: Shows messages whose error rate is less than 4%.

3. Press the **ENT** key to close the window.

   The list chosen at step 2 appears.

Note: When the following messages appear, set the List window to All Messages to show.

Urgent message:
"Message not chosen for display received; it is a int'l (or local) 00 message. Choose "All Message" (LIST menu) to display."

Normal message:
Int'l (or local) message not chosen for display received. Choose "All Message" (LIST menu) to display."

Protecting message from deleting

Messages are automatically deleted from the memory under the following conditions.
-66 hours passed from the moment when received.
-Older than No. 200

To prevent a message from being deleted, do the follows;

1. Choose the message at the list display.
2. Press the LIST key to show the list options.

All Messages
Alarm Messages
User Selected Messages
Good Messages
Lock Message

List options

3. Choose Lock Message from the list window.
   The protect icon ( ) appears next to the message selected.

Note 1: To unlock a message, choose it and then select Unlock Message in the list window. (The protect icon disappears.)
Note 2: When you unlock a message which was received 66 hours ago or a message that is older than No. 200, it will be deleted promptly when unlocked.
Note 3: Maximum each 50 messages for International and local (or 25% of each memory) can be protected.

2.12 Printing Messages

Received messages can be printed automatically or manually, from the built-in printer (NX-700A) or external printer (NX-700B).

Printing all messages displayed

All messages chosen on paragraph 2.11 can be printed out.

1. Press the **PRINT** key with showing all messages.

Print
Cancel Print

Print options

2. Press ▲ or ▼ to choose “Print”.
3. Press the **ENT** key to print.

Note: When a message is received while printing some messages, the new one cannot be printed.

Printing each message

1. Press ▲ or ▼ to choose the desired message from the list.
2. Press the **ENT** key to show the detailed information.
3. Press the **PRINT** key.
4. Press ▲or ▼ to choose “Print” from the window.
5. Press the **ENT** key to print.

Canceling printing

When a menu is displayed, you cannot cancel the printing.

1. Press the **PRINT** key while showing the messages to open the print window.
2. Press ▼ to choose “Cancel Print” and then press the **ENT** key.

2.13 Editing the NAVTEX Station List

Maximum 300 NAVTEX stations can be registered into the memory.

Note: To cancel editing of a NAVTEX station, press the **MENU/ESC** key. The message “Exit without saving?” appears. Choose “Yes”, and then press **ENT** key.

Adding NAVTEX station

You may add a NAVTEX station to the NAVTEX station list as follows:

1. Press the **MENU/ESC** key to show the main menu.
2. Press ▲ or ▼ to choose Service, and then press the **ENT** key.

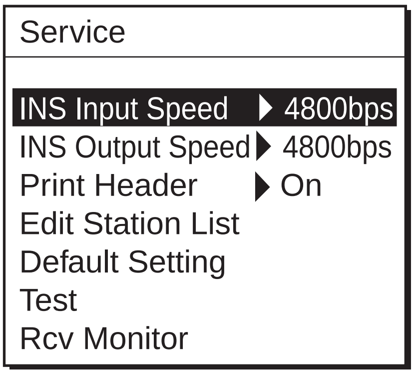

Service menu

3. Press ▲ or ▼ to choose Edit Station List, and then press the **ENT** key.

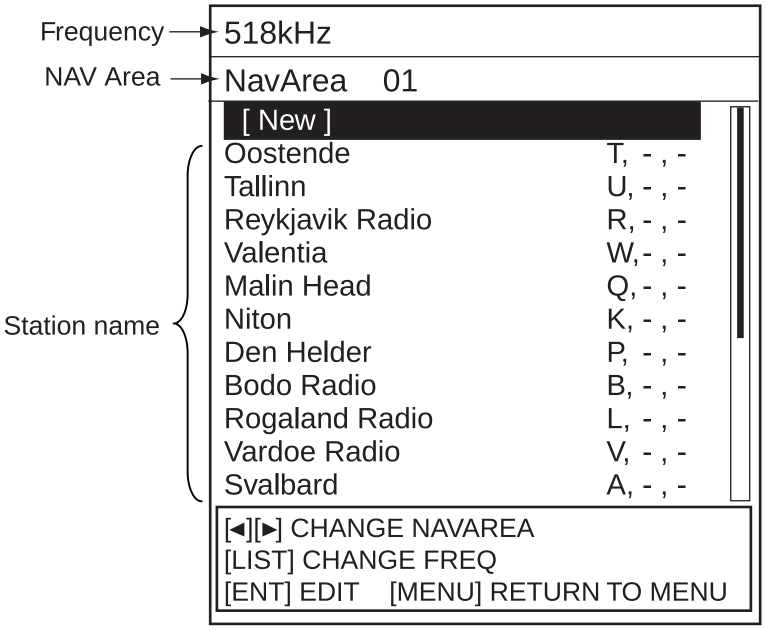

Edit station list display

4. Confirm that New is chosen, and then press the **ENT** key to show the addition window appears.

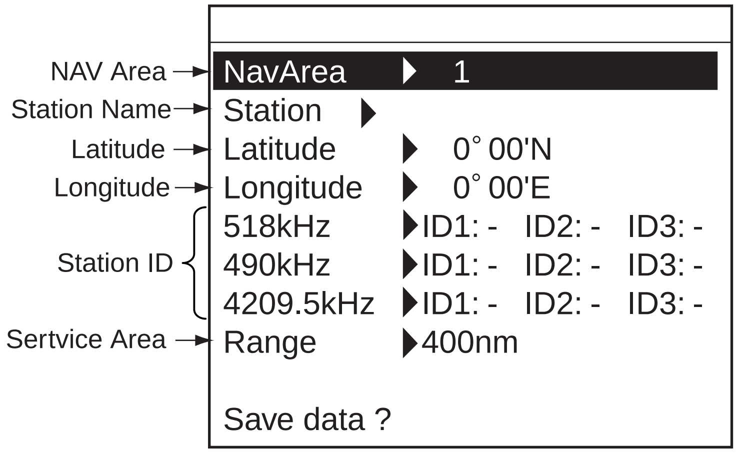

New addition window

5. Confirm that NavArea is chosen, and then press the **ENT** key to show the area No. window.
6. Press ▲ or ▼ to choose a Nav area No. (1 to 16, and EXT), and then press the **ENT** key.

   For NAV area No., see paragraph 1.4. EXT is reserved for future use.
7. Confirm that Station is chosen, and then press **ENT** key.
8. Enter a station name (Max. 18 characters), and then press the **ENT** key.

   a) Press ▲ or ▼ to choose a character. Each press of ▲ shows A -> … -> Z -> a -> … -> z -> 0 -> … -> 9 -> _ -> - -> space in that sequence.

   b) Press ► to move the cursor to next digit.

   c) Repeat steps a) and b) to complete the station name.
9. Confirm that Latitude is chosen, and then press the **ENT** key.
10. Enter the latitude for station, and then press the **ENT** key.

    Use ▲ or ▼ to switch to North and South.
11. Confirm that Longitude is chosen, and then press the **ENT** key.
12. Enter the longitude for station, and then pres the **ENT** key.

    Use ▲ or ▼ to switch to East and West.
13. Choose 518kHz, 490kHz or 4209.5kHz, and then press the **ENT** key.
14. Enter the station ID (A to Z), and then press the **ENT** key.

    For multiple stations, fill in ID2 and ID3.
15. Confirm that Range is chosen, and then press the **ENT** key.
16. Enter the service area (1 to 999 nm), and then press the **ENT** key.
17. Confirm that Save data? is chosen, and then press the **ENT** key.

    The message “Save new station?” appears.
18. Press ◄ to choose “Yes”, and then press **ENT** key to close the new addition window disappears.

Note: If the station ID was not entered at step 14, the message “Enter ID data.” appears. Press any key, and then enter the station ID.

19. To enter another NAVTEX station, repeat steps 4 through 18.
20. Press the **MENU/ESC** key several times to close the menu.

Editing NAVTEX station

Existing NAVTEX station may be edited as follows:

1. Press the **MENU/ESC** key to show the main menu.
2. Press ▲ or ▼ to choose Service, and then press the **ENT** key.
3. Press ▲ or ▼ to choose Edit Station List, and then press the **ENT** key.
4. Press ◄ or ► to choose the NAV area to be changed (01 to 16, EXT).
5. Press the **LIST** key to choose the frequency to be changed (518kHz, 490kHz or 4209.5kHz).
6. Press ▲ or ▼ to choose the station, and then press the **ENT** key.

7. Press ▲ to choose "Edit", and then press **ENT** key to show the edit window appears.

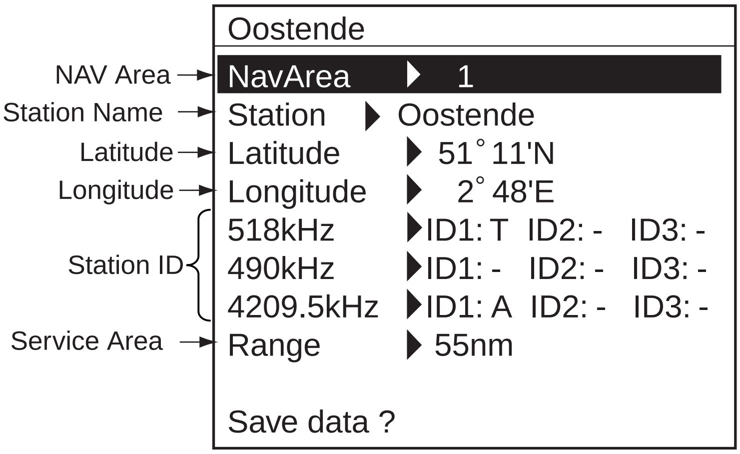

Edit window (Ex. NAVTEX station Oostende)

8. Edit data as appropriate.
9. Confirm that Save station? is chosen, and then press the **ENT** key.
10. Press ◄ to choose "YES", and then press the **ENT** key to erase the edit window.
11. Press the **MENU/ESC** key several times to close the menu.

Deleting NAVTEX stations

You may delete unnecessary NAVTEX stations as follows:

1. Press the **MENU/ESC** key to show the main menu.
2. Press ▲ or ▼ to choose Service, and then press the **ENT** key.
3. Press ▲ or ▼ to choose Edit Station List, and then press the **ENT** key.
4. Press ◄ or ► to choose the NAV area to be deleted. (01 to 16, EXT).
5. Press the **LIST** key to choose the frequency to be deleted (518kHz, 490kHz or 4209.5kHz).
6. Press ▲ or ▼ to choose the station name to be deleted, and then press **ENT** key.

   The item window appears.

Edit
Delete

7. Press ▲ or ▼ to choose Delete, and then press the **ENT** key.
   The message “Delete station?” appears.
8. Press ◄ to choose “Yes”, and then press the **ENT** key to close the edit window.
9. Press the **MENU/ESC** key several times to close the menu.

2.14 Icons

The NX-700 shows various icons to denote equipment status, and these are as shown in the table below.

Icon	Status	Meaning
Status icon (shown at the tip of display)		
	Blinking	Shows that an International frequency (518 kHz) message has not been read.
	Blinking	Shows that a Local frequency message has not been read. L1: 490 kHz, L2: 4209.5 kHz
	Blinking	
I	Blinking	While receiving a message. I: International frequency (518 kHz) L1: 490 kHz L2: 4209.5 kHz
L1	Blinking	
L2	Blinking	
I	Lighting	Appears when the equipment is ready to receive the International frequency.
L1	Lighting	Appears when the equipment is ready to receive the local frequency (L1: 490 kHz, L2: 4209.5 kHz)
L2	Lighting	
	Lighting	Displayed when the voltage of the internal battery is low. The message “Battery error” also appears on the display.
	Lighting	Print error (no paper, not connected to the printer, etc.). The message “Printer error” also appears on the display.
	Lighting	While printing.
Message icon (shown next to messages)		
NEW	Lighting	Displayed when message is displayed for the first time. (This icon disappeared after showing the detail or 24 hours has passed.)
SAR	Lighting	Displayed when message type D (SAR) is displayed.
!!	Lighting	Appears when message type A, B or L (Warning) is displayed.
	Lighting	Protected message

2.15 Messages List

In addition to the message “Received new local (int’l) msg.” the following message-related messages may appear on the display.

Message	Meaning	Remedy
New message received. Oldest message deleted to free up memory.	Appears when the oldest message is deleted to make space for the latest one.	Press any key.
Same message with lower error rate received. Currently displayed message will be deleted.	Appears when two messages have the same ID are received and the latter’s error rate is lower than the former.	Press any key.
Term of validity expired. Currently displayed message will be deleted.	Appears when 66 hours has passed after receiving the currently displayed message.	Press any key.
Message not chosen for display received; it is a int’l 00 message. Choose “All Message”(LIST menu) to display.	Appears when receiving an international message not specified for display (00) at the SELECT MESSAGES display.	Press any key, and then choose All Message in the List window.
Message not chosen for display received; it is a local 00 message. Choose “All Message”(LIST menu) to display.	Appears when receiving a local message not specified for display (00) at the SELECT MESSAGES display.	
Int’l message not chosen for display received. Choose “All Message”(LIST menu) to display.	Appears when receiving an international message not specified for display (Normal) at the SELECT MESSAGES display.	
Local message not chosen for display received. Choose “All Message”(LIST menu) to display.	Appears when receiving a local message not specified for display (Normal) at the SELECT MESSAGES display.	

2.16 Other Functions

This paragraph describes the various options which allow you to set up your unit to suit your needs.

NAVTEX menu

Item	Description	Setting
Mask Mode	Chooses the receiving mode. (See paragraph 2.6.)	INS, Manual
Auto Rcv Mask*	Turns Auto mode on/off.	Off, On
Local Channel*	Chooses the local channel.	490kHz, 4209.5kHz
Rcv Mask*	Receives messages in the category.	-
INS Output Mask*	Sets the station and type of message to output to the INS.	-
Printer Mask*	Chooses the station and message to print out automatically (See paragraph 2.8.)	

*: Not available on INS mode.

System menu

Item	Description	Setting
Warn Msg Alm	Turns the audible alarm on/off when receiving a Warning message (A, B, and L).	Off, On
Signal Monitor	Turns the audible alarm for monitoring of Rx signal on/off. **Off:** Disables monitoring. **Int'l:** Monitors international frequency. **Local:** Monitors local frequency.	Off, Int'l, Local
Key Beep	Turns key beep on/off.	Off, On
Time Offset	If a GPS receiver feeds nav data to the NAVTEX, you may use local time instead of UTC time. Enter the time difference between local time and UTC time.	-13:30 to +13:30
Units	Chooses units of measurement (distance and ship speed) to be shown on the User Display.	nm, kt, km, km/h, mi, mi/h
Printer	Sets the printer type. (See paragraph 4.6.)	None, NX-700A, Upright, Inverted

Display menu

Item	Description	Setting
Scrolling	Selects the speed of scrolling by pressing ▲ or ▼. **Slow:** Scrolls by one line. **Fast:** Scrolls by half of screen. **Skips to $$:** Scrolls line by line in list display; Skips to $$ position in detailed display.	Slow, Fast, Skip to $$
Font Size	Selects the size of characters.	Small, Medium, Large
Time Display	Selects the time format.	24 hour, 12 hour
Date Display	Selects the date format.	MMM DD YYY, DD MMM YYYY, YYYY MMM DD
User Display	Selects the type of data as user display to be shown at the bottom of the display. **Nav Data** 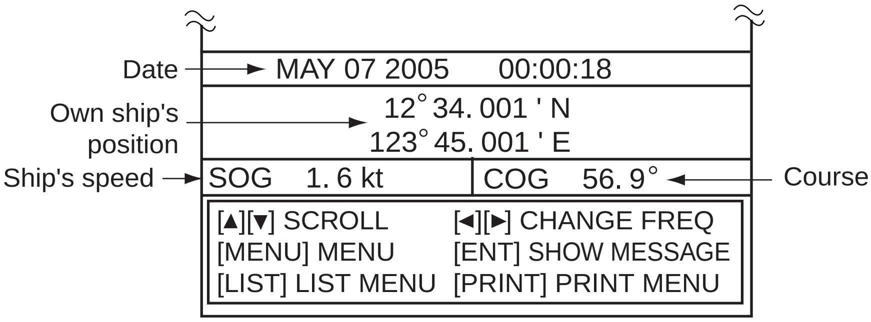 **Distance** 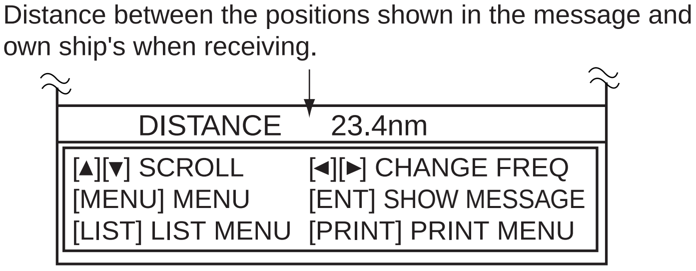 	Off, Nav Data, Distance
Speed Display	Selects the speed format to be displayed. **SOG:** Speed Over Ground **STW:** Speed Through Water	SOG, STW
Contrast	Sets the display contrast.	0 to 9
User Select Station & Msg	Choose the type of messages and stations to display on SELECT MESSAGES display (shown by choosing "User Selected Message" after pressing **LIST** key.) For detail, see section 2.8.	-

Service menu

Item	Description	Setting
INS Input Speed	Selects the data transmission speed at which to input data from INS.	4800, 9600, 19200, 38400 bps
INS Output Speed	Selects the data transmission speed to output data to the INS.	4800, 9600, 19200, 38400 bps
Print Header	Turns the header (Own ship's position, date, frequency, error rate and distance information when receiving a message) for printing on/off. 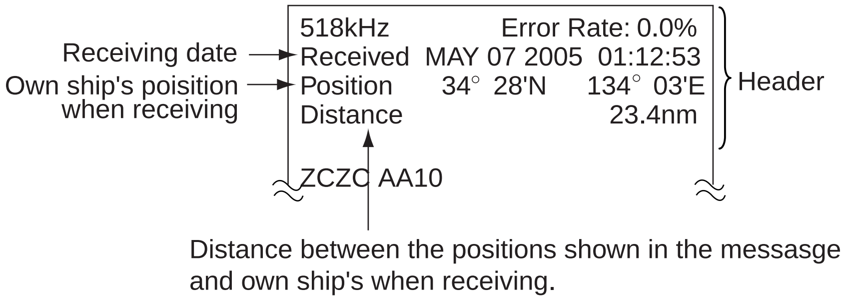 	Off, On
Edit Station List	Edits/deletes stations. (See paragraph 2.13.)	-
Default Settings	Restores all default settings. (See paragraph 3.5.)	-
Test	Starts the diagnostic test. (See paragraph 3.4.)	-
Rcv Monitor	Shows the status for International and Local receiving. 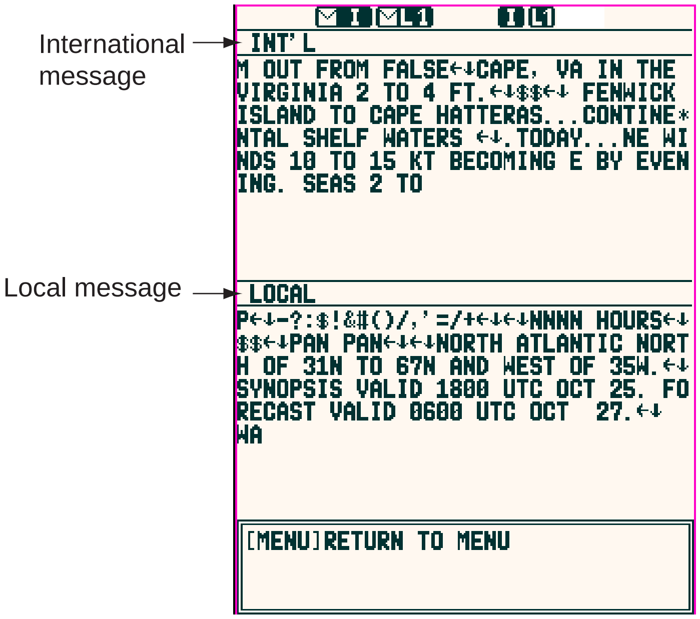 	-

This page is intentionally left blank.

3. MAINTENANCE & TROUBLESHOOTING

This chapter provides information necessary for keeping your unit in good working order and remedying simple problems.

⚠ WARNING

Do not open the equipment.

Hazardous voltage which can cause electrical shock exists inside the equipment. Only qualified personnel should work inside the equipment.

3.1 Maintenance

Regular maintenance is important for optimum performance. A maintenance program should be established and should at least include the items shown in the table below.

Maintenance program

Item	**Check point**	**Remedy**
Display unit connectors	Check for tight connection.	Tighten loosened connectors.
LCD	The LCD will, in time, accumulate a coating of dust which tends to dim the picture. Wipe LCD lightly with soft cloth to remove dust.	Wipe the LCD carefully to prevent scratching, using tissue paper and an LCD cleaner. To remove dirt or salt deposits, use an LCD cleaner, wiping slowly with tissue paper so as to dissolve the dirt or salt. Change paper frequently so the salt or dirt will not scratch the LCD. Do not use solvents such as thinner, acetone or benzene for cleaning.
Ground terminal	Check for tight connection and corrosion.	Clean or replace ground wire as necessary.

3.2 Replacement of Fuse, Battery and Thermal Paper

Fuse

The fuse inside the receiver unit protects the equipment from overcurrent or reverse polarity. If the fuse blows, contact your dealer about replacement.

Name	Type	Code No.
Fuse	FGMB 125V 2A PBF	000-157-479-10

⚠ WARNING

Use the proper fuse.

Use of a wrong fuse can result in damage to the equipment or cause fire.

Battery

A battery is installed inside the display unit, and it preserves data when the power is turned off. The life of the battery is about 5-10 years, and its voltage is checked when the power is turned on. When its voltage is low, the BATTERY ( ) icon appears on the display to alert you. When this happens, contact your dealer to request replacement of the battery.

Note: When the battery is dead, all default settings are restored.

Name	Type	Code No.
BATT	CR2450-F2ST2L	000-144-941

⚠ WARNING

Ensure battery polarity is correct.

Wrong polarity may cause the batteries to explode.

LCD Display

The life of the LCD is approx. 20,000 hour. When the LCD has expired, the brilliance cannot be raised.

Thermal paper (NX-700A only)

When the thermal paper runs out completely, the message “Printer error” (center of screen) and the icon (at the right-hand top corner) appear. Replace the paper as follows.

Name	Type	Code No.
Thermal paper	TP058-30CL	000-154-047

1. Turn off the power.
2. Press the button shown below to open the paper holder cover.

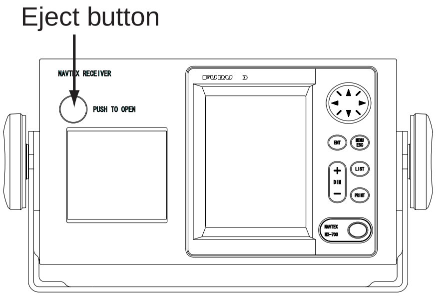

3. Peel the tape from the end of new paper.

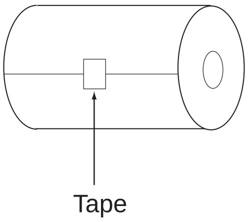

4. Set the new paper in the paper container in the direction shown below.

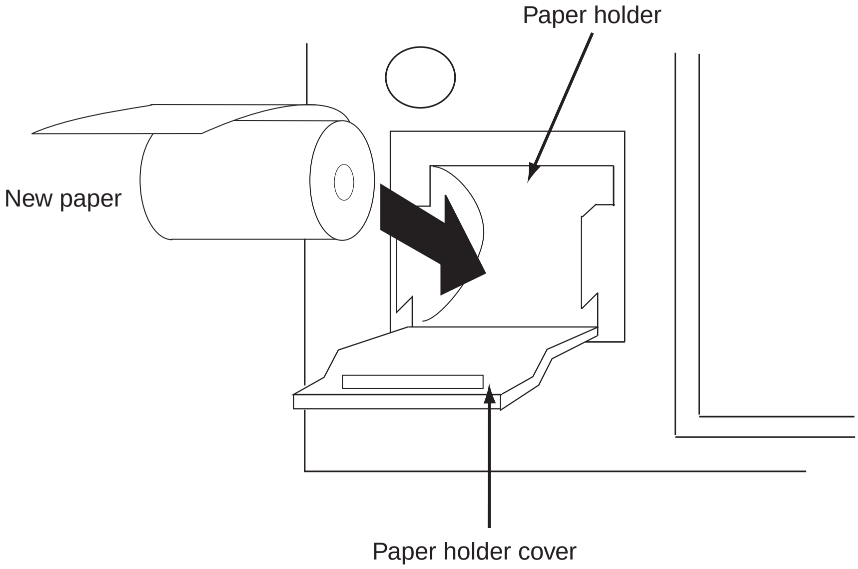

5. Pull the end of the paper by 2 to 3 cm (as shown above), and then close the cover.

3.3 Troubleshooting

This section provides simple troubleshooting procedures which the user can follow to restore normal operation. If you cannot restore normal operation do not attempt to check inside the unit. Any trouble should be referred to a qualified technician.

If . . .	then . . .
you cannot turn on the power	-ask serviceman to replace the blown fuse. -check battery for proper voltage output.
the equipment receives unwanted messages.	confirm that Manual mode is chosen. (See paragraph 2.6.)
NAVTEX signal cannot be received.	check equipment by the diagnostic test.
	check the broadcasting schedule.
	check that the D-sub connector is firmly fastened.
	check that the antenna cable is firmly fastened.
paper does not advance. (NX-700A only)	load paper correctly.
paper feeds but no recording. (NX-700A only)	check if correct thermal paper is being used.
paper has darkened. (NX-700A only)	keep the paper in a well-ventilated and cool place.
the recording is not proper for the external printer. (NX-700B only)	check the setting of Printer on the System menu.
	check the printer cable.
	check that the power of printer is turned on.
	check that the printer is available.
	check that paper is set properly.

3.4 Diagnostics

The memory test checks ROM, RAM, data port, battery, keyboard and LCD for proper operation and displays program version numbers.

1. Press the **MENU/ESC** key to open the main menu.
2. Press ▼ to choose Service, and then press the **ENT** key.
3. Press ▲ or ▼ to choose Test, and then press the **ENT** key.
   The message “Start test?” appears.
4. Press ◄ to choose “Yes”, and then press the **ENT** key.

Memory Test

Program No	: 0850196-****
Boot	: 0850192-****
ROM	: OK
SRAM	: OK
DRAM	: OK
CPU RAM	: OK
EEPROM	: OK
Battery	: OK (3.2V)

[PRINT] Print
[ENT] Continue

*: Program version no.

Memory test

For any NG (No Good), contact your dealer.

5. When the message “[ENT] Continue” appears at the bottom of screen, press ENT key to show the key test screen.

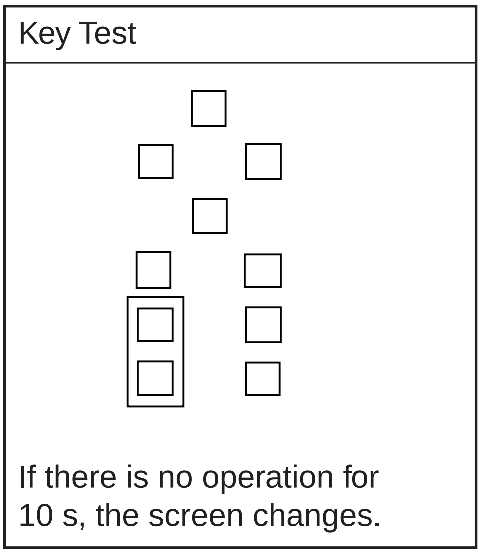

Key test

6. Press each key (except ⏻ key) one by one.
   A key is functioning properly if its on-screen location fills in black when the key is pressed.
7. After all keys have been tested or no key is pressed after 10 seconds, the equipment starts the LCD test by showing the white and black display (level 0 to 9).

8. When the message “Hit any key” appears on the screen, press any key (except ⏻ key) to show the Rx test screen.
   The alarm for receiving monitor sounds while the Rx test is being conducted.

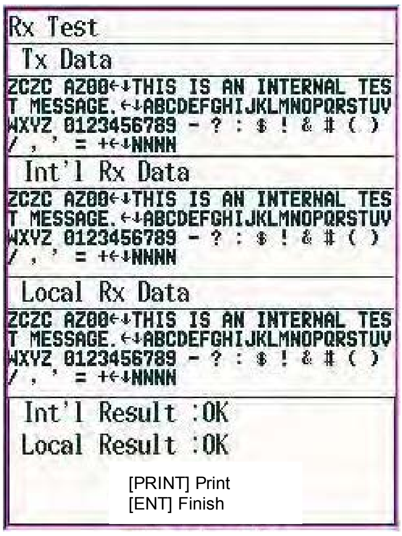

Rx test

9. When the message “[ENT] Finish” appears on the screen, press any key or wait for one minute with no operation to finish.
   Also the test message is printed by pressing **PRINT** key when the item other than “None” at Printer on System menu.
10. Press the **MENU/ESC** key several times to close the menu.

3.5 Restoring all Default Settings

This operation restores all default settings. The following two settings, however, are not disturbed.
-Received messages
-NAVTEX stations list (See paragraph 2.13.)

1. Press the **MENU/ESC** key to show the main menu.
2. Press ▼ to choose Service, and then press the **ENT** key.
3. Press ▲ or ▼ to choose Default Setting, and then press **ENT** key.
   The message “Restore default settings?” appears.
4. Press ◄ to choose “Yes”, and then press the **ENT** key.
   The Service menu appears.
5. Press the **MENU/ESC** key several times to close the menu.

4. INSTALLATION

4.1 Display Unit

The display unit can be installed on a tabletop, on the overhead, or in a panel. Refer to the outline drawings at the back of this manual for installation instructions. When selecting a mounting location, keep in mind the following points.

- Locate the unit away from exhaust pipes and vents.
- Locate it of direct sunlight, (or in a suitable, ventilated enclosure) to prevent heat which can build up inside the cabinet.
- The mounting location should be well ventilated.
- Mount the unit where shock and vibration are minimal.
- Allow sufficient maintenance space at the sides and rear of the unit and leave sufficient slack in cables, to facilitate maintenance and servicing.
- Compass safe distances are:
  NX-700A (Standard: 1.45 m, Steering: 0.95 m)
  NX-700B (Standard: 0.30 m, Steering: 0.30 m)

Tabletop, overhead mounting

1. Fix the hanger by using four self-tapping screws (5x20).
2. Screw knob bolts in display unit, set it to the hanger, and tighten the knob bolts.

Note: For the overhead mounting, reinforce the mounting location for the weight of the display unit (NX-700A: 3.3 kg, NX-700B: 0.7 kg) and secure the hanger, with bolts, nuts and washers (local supply).

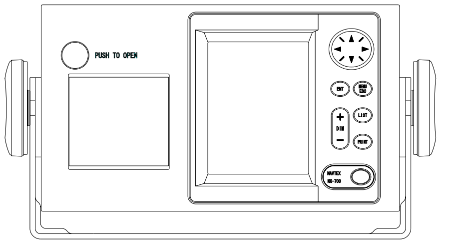

NX-700A

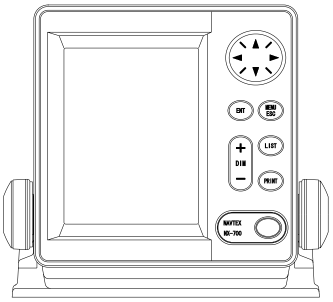

NX-700B

Flush mounting

The display unit can be installed flush mounted in a console or panel by using the optional flush mount kit.

(For NX-700A)

Type: OP08-19 Code No.: 004-515-260

Name	Type	Code No.	Qty	Remarks
Mounting metal	08-023-1019	100-326-960	1	
Self-tapping screw	5X20	000-802-081	6	
Hex. bolt	M8x15	000-862-144	2	
Spring washer	M8	000-864-262	2	

1. Cut out a hole with dimensions as shown below in the mounting location.

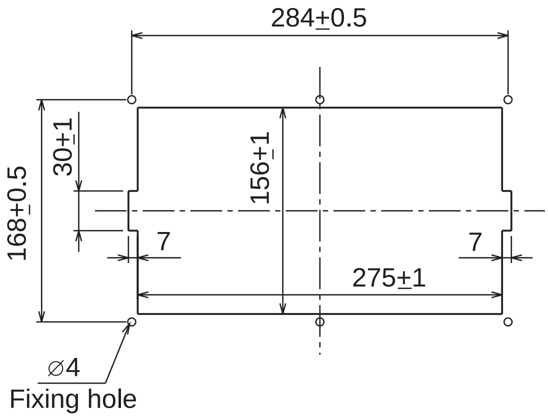

2. Attach the fixing metal to the display unit with two hex. bolts (M8x15, supplied with optional kit) and spring washers (supplied with optional kit).
3. Fasten six self-tapping screws to fix the display unit to the mounting location.

(For NX-700B)

Type: OP08-20 Code No.: 004-515-270

Name	Type	Code No.	Qty	Remarks
Mounting metal	08-023-2011	100-327-010	1	
Self-tapping screw	5x20	000-802-081	4	
Pan head screw	M4x12	000-802-130	4	

1. Cut out a hole with dimensions as shown below in the mounting location.

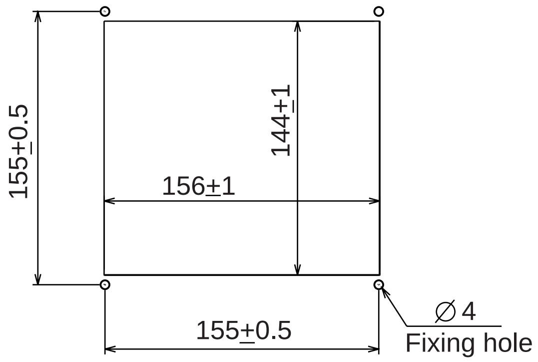

2. Attach the fixing metal to the display unit with four pan head screws (M4X12, supplied with the optional kit).
3. Fasten four self-tapping screws (supplied with the optional kit) to fix the display unit to the mounting location.

4.2 Receiver Unit

General mounting considerations

- The mounting location should be well ventilated and dry.
- The unit can be mounted on bulkhead or the desk.
- Secure the maintenance space shown in drawing at the back of this manual for ease of maintenance and service.
- Compass safe distances are:
  Standard: 1.15 m, Steering: 0.75 m

Mounting Method

Fasten the receiver unit with four self-tapping screws (5x20, supplied as installation material). For bulkhead mounting, do the follows.

1. Tighten lower self-tapping screws so there is 5 mm clearance between bottom of screw head and bulkhead.
2. Hook the receiver unit on the lower screws.
3. Tighten upper screws followed by the lower screws.

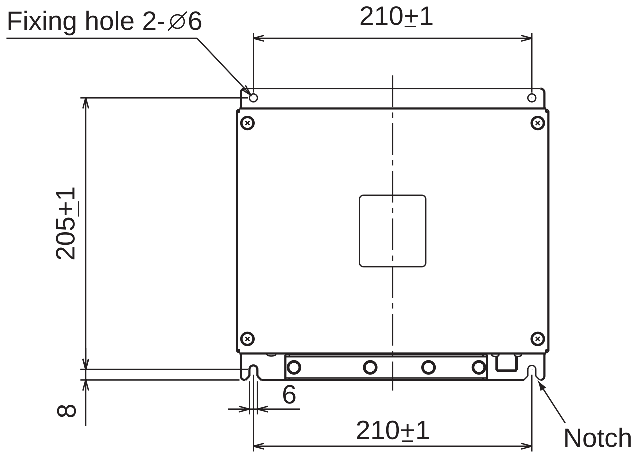

4.3 Antenna Unit

Mounting considerations

Install the antenna unit referring to the antenna installation diagram at the back of this manual. When selecting a mounting location for the antenna unit, keep in mind the following points:

- Do not shorten the antenna cable.
- Do not install the antenna unit within beamwidth of the radar.

4.4 Printer (NX-700B only)

Prepare the printer by locally as shown below for the NX-700B.

-Serial RS-232C
-Serial printer
-Baud Rate: 9600 bps
-Character length: 8 bit
-Parity: No
-Flow control: Xon/Xoff
-32 characters/line or more

4.5 Wiring

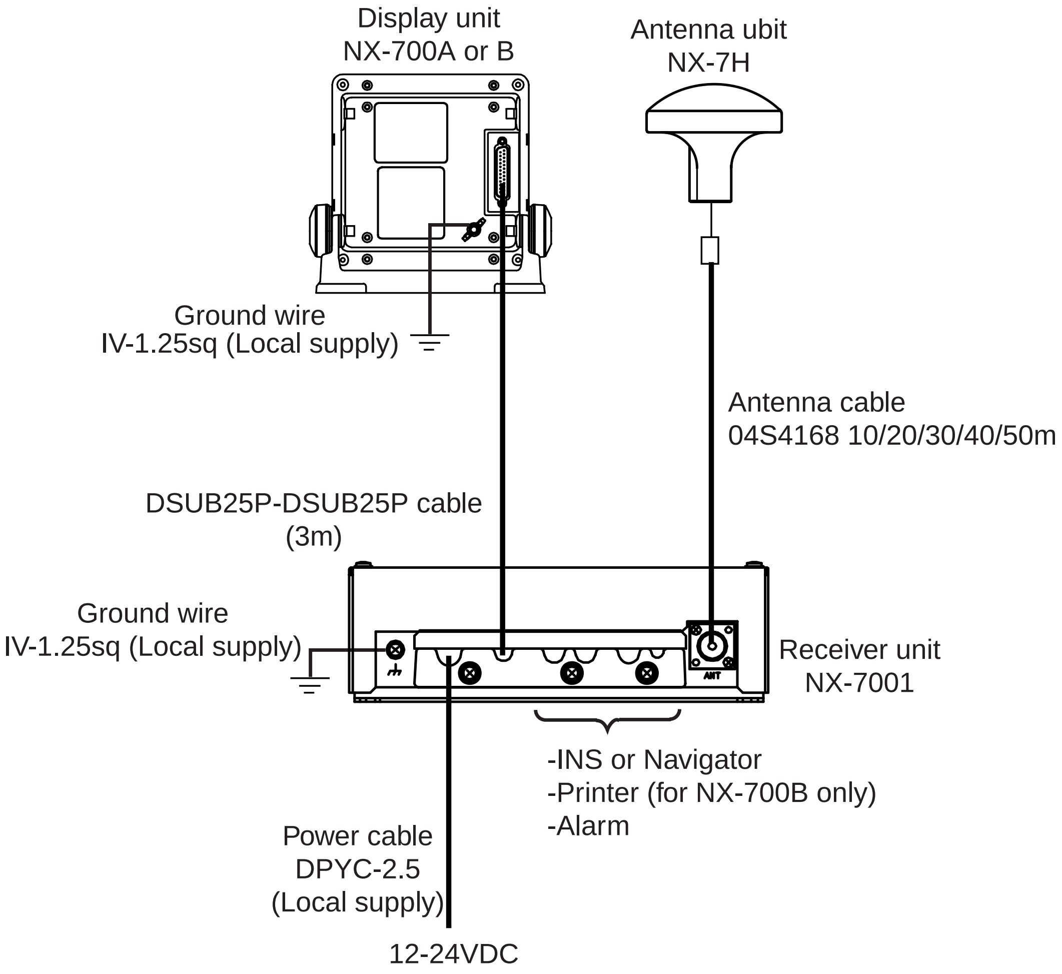

Receiver unit

All cables are gathered to the receiver unit. Connect cables at inside of the receiver unit as shown below.

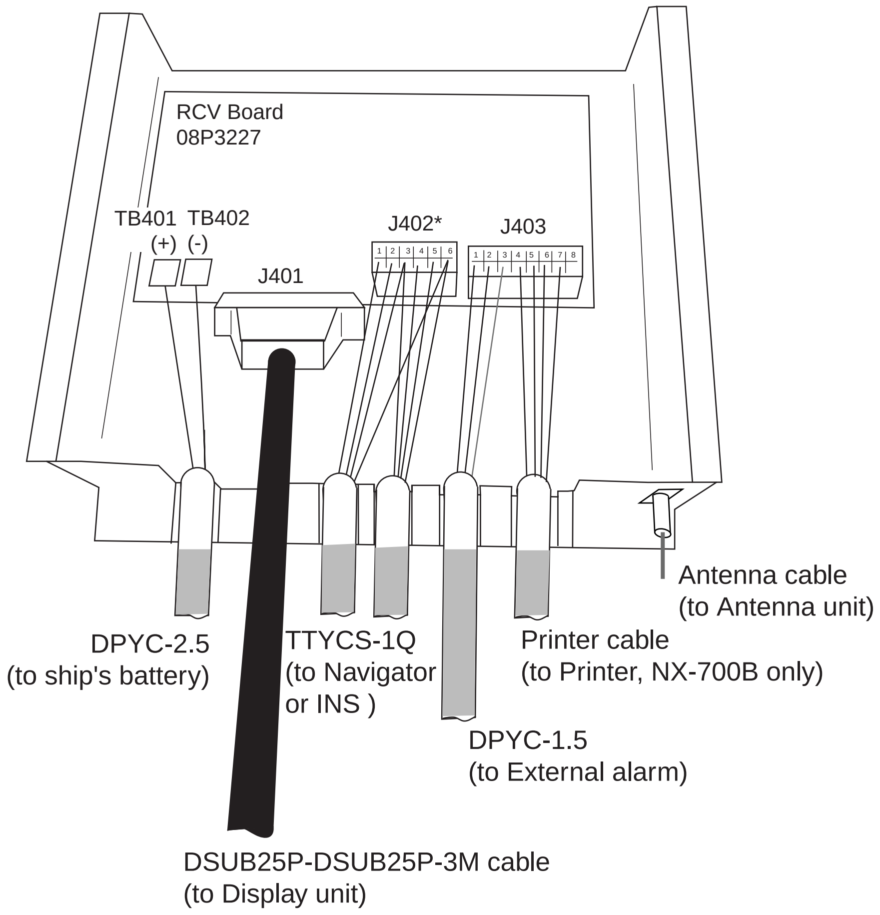

Receiver unit, inside view

Use the following JIS cable (Japan Industrial Standard) or equivalent to connect power source, INS and external alarm appropriately.

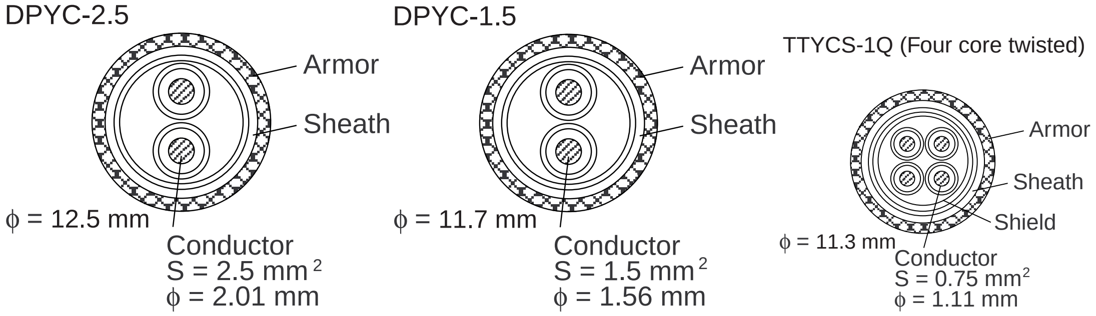

For printer, use the cable supplied with the printer.

Fabricate these cables as below to connect to the receiver unit.

DPYC-1.5 (For external alarm)

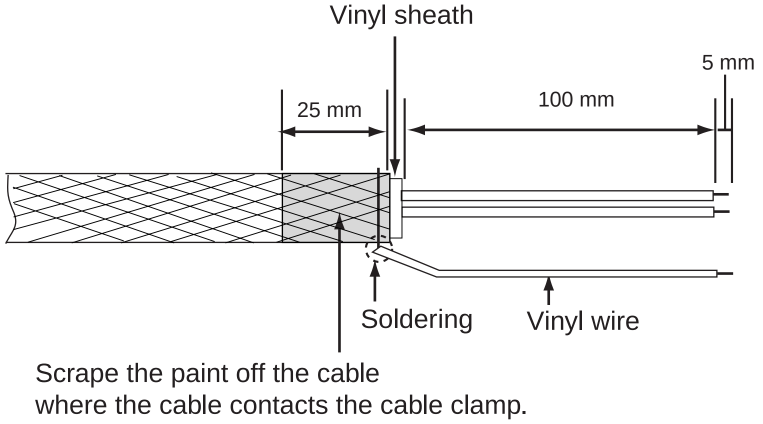

TTYCS-1Q (For Navigator or INS)

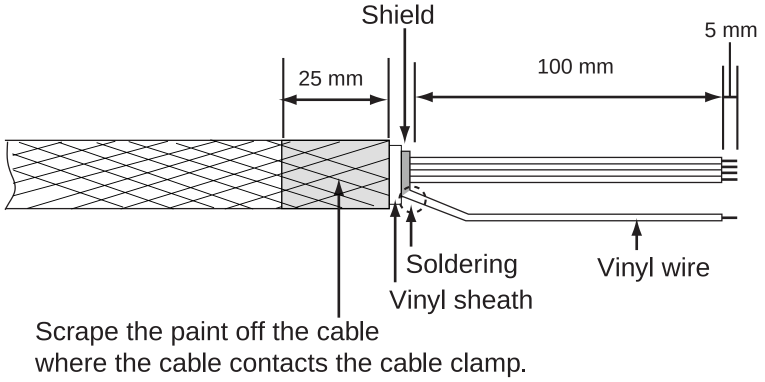

DPYC-2.5 (For ship's battery)

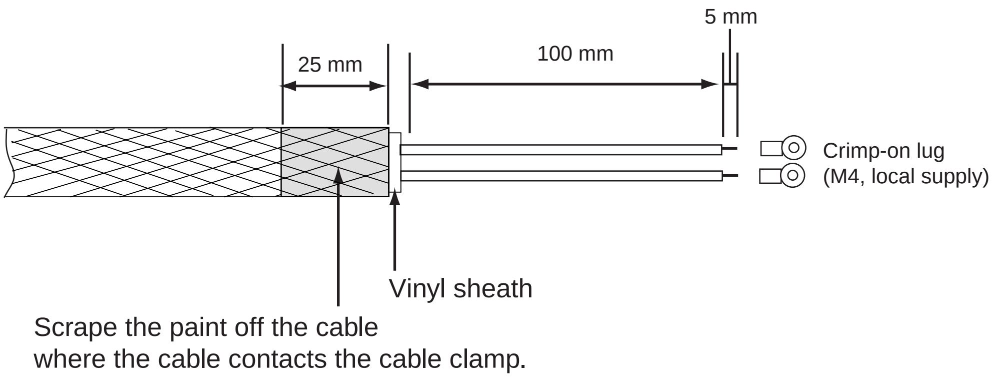

How to use J402 and 403 connector

1. Insert the terminal opener (attached in the receiver unit) into the connector.
2. Insert a wire in terminal while pressing and holding the terminal opener.
3. Release the terminal opener. Pull wire to confirm that it is connected firmly.

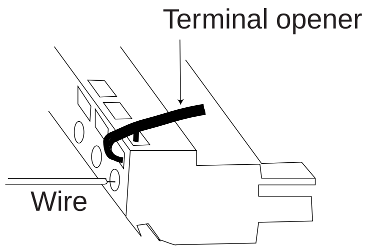

Antenna cable

Be sure to leave some slack in the cable for future service and maintenance.

For RG-10/UY, RG-214 cable
When using the coaxial cable, type RG-10/UY or RG-214, attach the FM-MP-7 connector (supplied as installation material) or PL-259 (local supply) as below.

1. Remove the sheath by 30 mm.
2. Bare 23 mm of the center conductor. Trim braided shield by 5 mm and tin.
3. Slide coupling ring onto cable.
4. Screw the plug assembly on the cable.
5. Solder plug assembly to braided shield through solder holes. Solder contact sleeve to conductor.
6. Screw coupling ring into plug assembly.

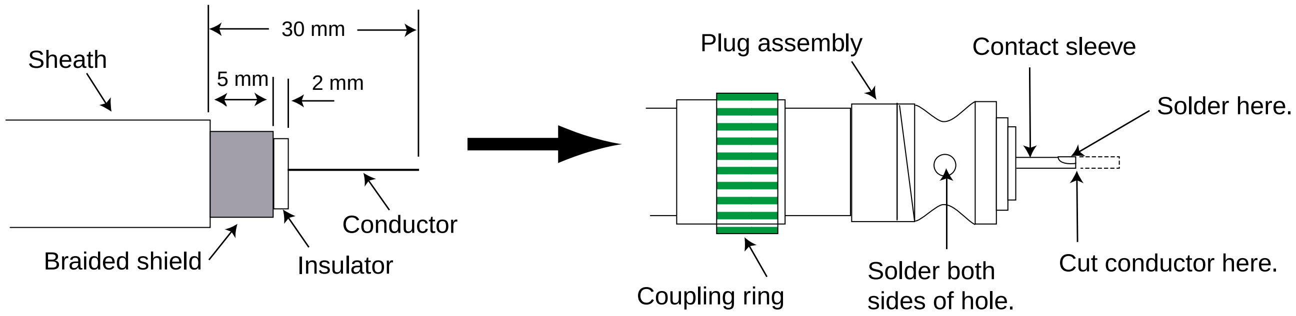

Note: When the RG-214 cable is used, care must be exercised to prevent damage to the cable as it has no armor.

Extending antenna cable length

When connecting two cables for extension, use optional extension cable kit OP-04-2.

Code No.: 000-041-174 (10 m), 000-041-175 (20 m), 000-041-176 (30 m), 000-041-177 (40 m), 000-041-178 (50 m)

Name	Type	Code No.	Qty	Remarks
Cable assy	04S4168	005-948-320	1	10 m w/connectors
		005-948-330		20 m w/connectors
		005-948-340		30 m w/connectors
		005-948-350		40 m w/connectors
		005-948-360		50 m w/connectors
Connector	FMA-1	000-152-964-10	1	
Insulating tape	U tape 0.5x19x5M	000-800-985	1	

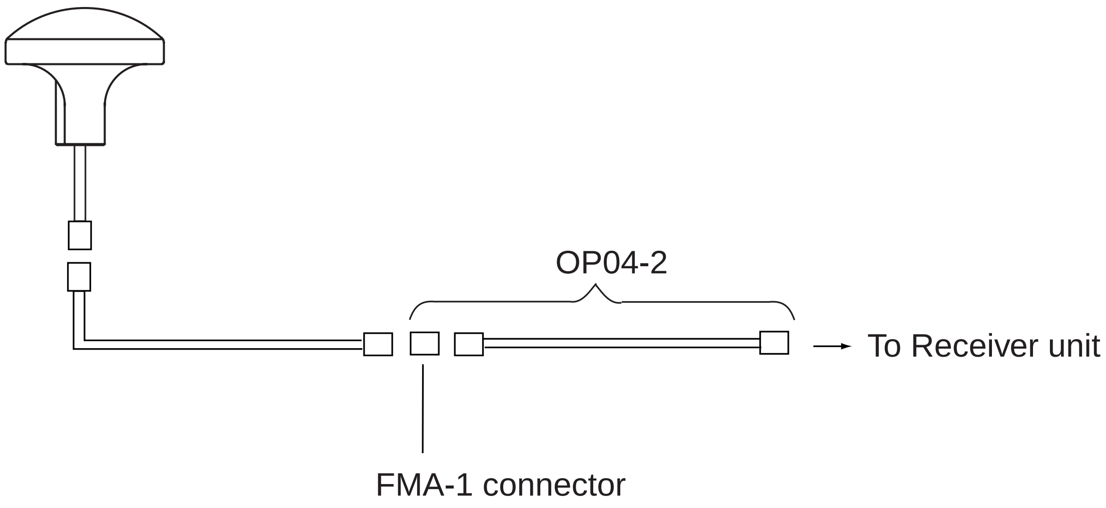

<u>**Grounding**</u>

The ground wire (local supply) should be 1.25 sq or larger. The ground wire should be as short as possible.

4.6 Setting of Printer

After the connection completely, the setting of printer should be done for NX-700B as shown below. (For NX-700A, use the default setting as is.)

1. Press the ⏻ key to turn the power on.
2. Press the **MENU** key to show the main menu.

Menu
NAVTEX
System
Display
Service

3. Press ▼ to choose System, and then press the **ENT** key or ► to activate the System menu.

System	
Warn Msg Alm	▶ Off
Signal Monitor	▶ Off
Key Beep	▶ Off
Time Offset	▶ +00:00
Units	▶ nm, kt
Printer	▶ NX-700A

4. Press ▼ to choose Printer, and then press the **ENT** key or ► to show the item window.

None
NX-700A
Upright
Inverted

5. Press ▲ or ▼ to choose the appropriate setting, and then press the **ENT** key.

   None: When no printer is connected.

   NX-700A: For NX-700A only.

   Upright: When NX-700B is connected to an upright-type printer which ejects paper in bottom to top direction.

   Inverted: When NX-700B is connected to a bulkhead mount printer which ejects paper in top to bottom direction.
6. Press the **MENU** key several times to close the menu.

4.7 Digital Interfacing

This equipment can receive navigation data in IEC 61162-1 Ed2/2 format.

Priority

TIME＆DATE	ZDA
L/L	GNS > GGA > RMC > GLL
SOG	VTG > VBW > RMC
STW	VHW > VBW
COG	VTG > RMC

Input data sentence description

GGA: GPS position fixing condition

```
$--GGA,hhmmss.ss,llll.lll,a,yyyyy.yyy,a,x,xx,x.x,x.x,M,x.x,M,x.x,xxxx*hh<CR><LF>
         |        |   |     |    | | |  |  |  |  |  | |   |   |
         |        |   |     |    | | |  |  |  |  |  | |   |  +-- 11
         |        |   |     |    | | |  |  |  |  |  | |  +---- 10
         |        |   |     |    | | |  |  |  |  |  | +--------- 9
         |        |   |     |    | | |  |  |  |  +---+------------ 8
         |        |   |     |    | | |  |  +---+------------------ 7
         |        |   |     |    | | |  +------------------------- 6
         |        |   |     |    | | +---------------------------- 5
         |        |   |     |    | +------------------------------ 4
         |        |   |     +----+-------------------------------- 3
         |        +---+------------------------------------------- 2
         +-------------------------------------------------------- 1
```

1. UTC of position
2. Latitude, N/S
3. Longitude, E/W
4. GPS quality indicator (see note)
5. Number of satellite in use,00-12, may be different from the number in view
6. Horizontal dilution of precision
7. Antenna altitude above/below mean sealevel, m
8. Geoidal separation, m
9. Age of differential GPS data
10. Differential reference station ID, 0000-1023
11. Checksum

NOTE
0 = fix not available or invalid
1 = GPS SPS mode, fix valid
2 = differential GPS, SPS mode, fix valid
3 = GPS PPS mode, fix valid
4 = Real Time Kinetic. Satellite system used in RTK mode with fixed integers
5 = Float RTK. Satellite system used in RTK mode with floating fingers
6 = Estimated (dead reckoning) mode
7 = Manual input mode
8 = Simulator mode
The GPS quality indicator shall not be a null field.

GLL: Latitude and longitude

```
$--GLL,llll.lll,a,yyyyy.yyy,a,hhmmss.ss,A,a*hh<CR><LF>
           |    |        |      |           |     |  |  |
           |    |        |      |           |     |  | +------- 6
           |    |        |      |           |     | +--------- 5
           |    |        |      |           |    +----------- 4
           |    |        |      |          +---------------- 3
           |    |       +------+---------------------- 2
           +---+--------------------------------- 1
```

1. Latitude, N/S
2. Longitude, E/W
3. UTC of position
4. Status: A=data valid, V=data invalid
5. Mode indicator (see note)
6. Checksum

NOTE Positioning system Mode indicator:

A = Autonomous
D = Differential
E = Estimated (dead reckoning)
M = Manual input
S = Simulator
N = Data not valid

The Mode indicator field supplements the Status field. The Status field shall be set to V=invalid for all values of Operating Mode except for A=Autonomous and D=Differential. The positioning system Mode indicator and Status field shall not be null fields.

NRM: NAVTEX receiver mask

This command is used to manipulate the configuration masks that control which messages are stored, printed and sent to the INS port of te NAVTEX receiver.

$--NRM,x,x,hhhhhhh,hhhhhhh*hh<CR><LF>

- message type mask (SEE NOTE 4)
- transmitter coverage area mask (SEE NOTE 3)
- frequency table indes, 1 to 9 (SEE NOTE 2)
- function code, 0 to 9 (SEE NOTE 1)

NOTE 1: The function code is used to further identify the purpose of the sentence. The meaning of the function code is as follows:
0 - request messages for the given mask
1 - set/report the storage mask
2 - set/report the printer mask
3 - set/report the INS mask
4 to 9 - reserved for future use

NOTE 2: The frequency indicator identifies the frequency that the NAVTEX message was received on:
1 = 490 kHz
2 = 518 kHz
3 = 4209.5 kHz
4 through 9 are reserved for future use

NOTE 3: The transmitter coverage area mask is defined as a 32 bit hex field where the least signification bit represents transmitter coverage area "A", the next bit is "B" and so on up to bit 25 which is "Z". Bits 31 through 26 are reserved for future use and are set to zero. To select a transmitter coverage aera, its corresponding bit should be set to one. To deselect a transmitter coverage area its corresponding bit should be set to zero.

NOTE 4: The message type mask is defined as a 32 bit hex field where the least significant bit represents message type "A", the next bit is "B" and so on up to bit 25 which is "Z". Bits 31 through 26 are reserved for future use and are set to zero. To select a message type its corresponding bit should be set to zero.

When another device (for example an INS) wishes to set one or more of the bit masks it sends one or more NRM sentences to the NAVTEX receiver. When another device wishes to determine the current values of the bit masks it sends a query sentence to the NAVTEX receiver as follows:

$--CRQ, NRM*hh<CR><LF>

On receiving this query, the NAVTEX receiver will respond with one NRM sentences for each mask type and frequency combination that it supports. For example a NAVTEX receiver which support separate storage, printer and INS masks for each of three receiver frequencies will return a total of nine NRM sentences in response to the above query.

Example

$INNRM,2,1,00001E1F, 00000023*57

This example specifies that message identifiers "A", "B" and "F", received from transmitter areas "A" to "E" and "J" to "M" on 490 kHz should be sent to the printer port when they are received. Note that this command sets the printer mask for future use; there is no immediate output generated as a result of receiving this command.

Example

$INNRM,0,2,00001E1F,0FFFFFF*21

This example requests that all currently stored messages of all message type, received from transmitter areas "A" to "E" and "J" to "M" on 518 kHz should be immediately returned to the requesting device as a series of NRX sentences. Note that this command does not update any of the stored masks.

RMC: Recommend Minimum Specific GNSS Data

```
$--RMC,hhmmss.ss,A,llll.lll,a,yyyyy.yyy,a,x.x,x.x,xxxxxx,x.x,a,a*hh<CR><LF>
           |     |    |     |     |     |  |   |    |     |  | | |
           |     |    |     |     |     |  |   |    |     |  | | +--- 10
           |     |    |     |     |     |  |   |    |     |  | +----- 9
           |     |    |     |     |     |  |   |    |     +--+------- 8
           |     |    |     |     |     |  |   |    +---------------- 7
           |     |    |     |     |     |  |   +--------------------- 6
           |     |    |     |     |     |  +------------------------- 5
           |     |    |     |     +-----+---------------------------- 4
           |     |    +-----+---------------------------------------- 3
           |     +--------------------------------------------------- 2
           +--------------------------------------------------------- 1
```

1. UTC of position fix
2. Status: A=data valid, V=navigation receiver warning
3. Latitude, N/S
4. Longitude, E/W
5. Speed over ground, knots
6. Course over ground, degrees true
7. Date: dd/mm/yy
8. Magnetic variation, degrees E/W
9. Mode indicator (see note)
10. Checksum

NOTE Positioning system Mode indicator:

A = Autonomous
D = Differential
E = Estimated (dead reckoning)
M = Manual input
S = Simulator
N = Data not valid

The Mode indicator field supplements the Status field. The Status field shall be set to V=invalid for all values of Operating Mode except for A=Autonomous and D=Differential. The positioning system Mode indicator and Status field shall not be null fields.

ZDA: Time and date

```
$--ZDA,hhmmss.ss,xx,xx,xxxx,xx,xx*hh<CR><LF>
       |         |  |    |   |  | |
       |         |  |    |   |  | +--------- 7
       |         |  |    |   |  +----------- 6
       |         |  |    |   +-------------- 5
       |         |  |    +------------------ 4
       |         |  +---------------------- 3
       |         +------------------------ 2
       +-------------------------------- 1
```

1. UTC
2. Day, 01 to 31(UTC)
3. Month, 01 to 12(UTC)
4. Year(UTC)
5. Local zone hours, 00h to +-13h
6. Local zone minutes, 00 to +59
   as local hours
7. Checksum

ACK: Acknowledge

```
$--ACK,xxx*hh<CR><LF>
       |   |
       |   + ------------------------2
       +-----------------------------1
```

1. Local alarm number(identifier)
2. Checksum

GNS:

```
$--GNS,hhmmss.ss,llll.lll,a,yyyyy.yyy,a,c--c,xx,x.x,x.x,x.x,x.x,x.x*hh<CR><LF>
       |       |    |    |    | |   | |  |  |  |  | |
       |       |    |    |    | |   | |  |  |  |  | +--- 11
       |       |    |    |    | |   | |  |  |  |  +------ 10
       |       |    |    |    | |   | |  |  |  +---------- 9
       |       |    |    |    | |   | |  |  +-------------- 8
       |       |    |    |    | |   | |  +------------------ 7
       |       |    |    |    | |   | +---------------------- 6
       |       |    |    |    | |   +------------------------- 5
       |       |    |    |    | +------------------------------ 4
       |       |    |    +-----+--------------------------------- 3
       |       +-----+------------------------------------------- 2
       +---------------------------------------------------------- 1
```

1. UTC of position
2. Latitude, N/S
3. Longitude, E/W
4. Mode indicator
5. Total number of satllite in use,00-99
6. HDOP
7. Antenna altitude, metres, re:mean-sea-level (geoid)
8. Geoidal separation
9. Age of differential data
10. Differential reference station ID
11. Checksum

VHW: Water speed and heading

```
$--VHW,x.x,T,x.x,M,x.x,N,x.x,K*hh<CR><LF>
   |   |   |   |   |  |   |  |  |
   |   |   |   |   |  |   |  | +--------- 5
   |   |   |   |   |  |  +--+----------- 4
   |   |   |   |  +--+----------------- 3
   |   |  +---+----------------------- 2
  +---+---------------------------- 1
```

1. Heading, degrees true
2. Heading, degrees magnetic
3. Speed, knots
4. Speed, km/h
5. Checksum

VTG: Course over ground and ground speed

```
$--VTG,x.x,T,x.x,M,x.x,N,x.x,K,a*hh<CR><LF>
       |  |   |  |   |   |   |  |  |  |
       |  |   |  |   |   |   |  |  |  +------- 6
       |  |   |  |   |   |   |  |  +--------- 5
       |  |   |  |   |   |  +--+----------- 4
       |  |   |  |  +--+----------------- 3
       |  | +--+----------------------- 2
      +--+---------------------------- 1
```

1. Course over ground, degrees true
2. Course over ground, degrees magnetic
3. Speed over ground, knots
4. Speed over ground, km/h
5. Mode indicator (see note)
6. Checksum

NOTE Positioning system Mode indicator:

A = Autonomous
D = Differential
E = Estimated (dead reckoning)
M = Manual input
S = Simulator
N = Data not valid

The positioning system Mode indicator field shall not be a null field.

VBW: Dual ground/water speed

```
$--VBW,x.x,x.x,A,x.x,x.x,A,x.x,A,x.x,A*hh<CR><LF>
        |   | |  |   | |  | |  |  | |
        |   | |  |   | |  | |  |  | +--- 11
        |   | |  |   | |  | |  |  +----- 10
        |   | |  |   | |  | |  +-------- 9
        |   | |  |   | |  | +----------- 8
        |   | |  |   | |  +-------------- 7
        |   | |  |   | +----------------- 6
        |   | |  |   +-------------------- 5
        |   | |  +------------------------ 4
        |   | +--------------------------- 3
        |   +----------------------------- 2
        +--------------------------------- 1
```

1. Longitudial water speed, knots
2. Transverse water speed, knots
3. Status: water speed, A=data valid V=data invalid
4. Longitudial ground speed, knots
5. Transverse ground speed, knots
6. Status: ground speed, A=data valid V=data invalid
7. Stern transverse water speed, knots
8. Status: stern water speed, A=data valid V=data invalid
9. Stern transverse ground speed, knots
10. Status: stern ground speed, A=data valid V=data invalid
11. Checksum

PFEC,nxfrq : LOCAL FREQUENCY

$PFEC,nxfrq,x*hh<CR><LF>

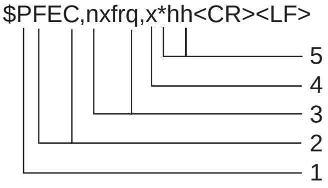

1. Proprietary sentence ID
2. Manufacturer's Mnemonic code: Furuno Electoric Co.,ltd.
3. Manufacturer's Data: Local frequency setting command
4. Manufacturer's Data: Local frequency indicator (SEE NOTE)
5. Checksum

NOTE Local frequency indicator:
0 = 490kHz
1 = 4209.5kHz

<u>Output data description</u>

NRX: New NAVTEX received message

The NRX sentence is used to transfar the contents of a received NAVTEX message from the NAVTEX receiver to another device. As the length of a single NAVTEX message may exceed the number of characters permitted in a single sentence, many NRX sentences may be required to transfer a single NAVTEX message.

```
$CRNRX,xxxx,x,x,x,xx,xx,xxxx,hhmmss,x.x,n--n*hh<CR><LF>
```

- encapsulated message
- error rate % (xx.x)
- UTC of receipt of message
- year
- month (1-12)
- day (0-31)
- freq ('490', '518' or '4209')
- number of lines in message (1 to 999)
- line number (1 to 999)
- message identifier ($B_1B_2B_3B_4$)

NOTE 1: The total number of sentences required to transfer the NAVTEX message from the NAVTEX radio receiver. The first field specifies the total number of sentences used for a message, minimum value 1. The Sentence Number field identifies the older of this sentence in the message, minimum value 1. All sentences contain the same number of fields. For efficiency it is recommended that null fields be used in the additional sentences where the data is unchanged from the first sentence (this applies to fields 4 through 12).

NOTE 2: The sequential message identifier provides a unique identifier for each NAVTEX message represented by a group of sentences. Though the message code (field 4) contains a NAVTEX message serial number, there are special cases when the message serial number is set to 00 and has a different meaning or when the same message code can occur more than once. When these conditions occur, the sequential message identifier can be relied upon to uniquely identify this NAVTEX message from other NAVTEX messages with the same message code.

NOTE 3: The NAVTEX message code contains three related entities. The first character identifies the transmitter coverage area and the second character identifies the type of message. Both these characters are as defined in Table I of Recommendation ITU-R M.625-3, combination numbers 1-26. Transmitter identification characters are allocated by the IMO NAVTEX manual (IMO publication 951E). The remaining two characters are restricted to numerals with a range of 00 to 99 and represent a serial number for each type of message. The value of 00 is a special case and not considered a serial number.

NOTE 4: The frequency indicator identifies the frequency that the NAVTEX message was received on:
0 = not received over air (eg test messages)
1 = 490 kHz
2 = 518 kHz
3 = 4209,5 kHz
4 through 9 are reserved for future use

NOTE 5: The total number of characters indicates the expected size of the message body sent in this sequence of NRX sentences. It does not include the additional overhead for reserved characters found in table 1 of IEC 61162-1.

NOTE 6: Status “A” is used for syntactically correct message reception. Status “V” is used for syntactically incorrect message reception, e.g. end characters NNNN missing.

NOTE 7: The message body may contain reserved characters as defined in IEC 61162-1.

ALR: Set alarms

```
$CRALR,hhmmss.ss,xxx,A,A,c--c*hh<CR><LF>
        |         |  |  |  |   |
        |         |  |  |  |   +----------------- 6
        |         |  |  |  +----------------- 5
        |         |  |  +-------------------- 4
        |         |  +---------------------- 3
        |         +------------------------- 2
        +--------------------------------- 1
```

1. Time of alarm condition change, UTC
2. Local alarm number(identifier)   (SEE NOTE.)
3. Alarm condition(A=threshold exceeded, V=not exceeded)
4. Alarm's acknowledge state, A=acknowledged V=unacknowledged
5. Alarm's description text
6. Checksum

NOTE   Local alarm number (identifier):
001 = “NAVTEX: Navigational warning”
002 = “NAVTEX: Meteorological warning”
003 = “NAVTEX: Search and rescue information”
006 = “NAVTEX: General failure”
051 = “NAVTEX: Printer Error”
052 = “NAVTEX: Battery Error”

Serial Interface

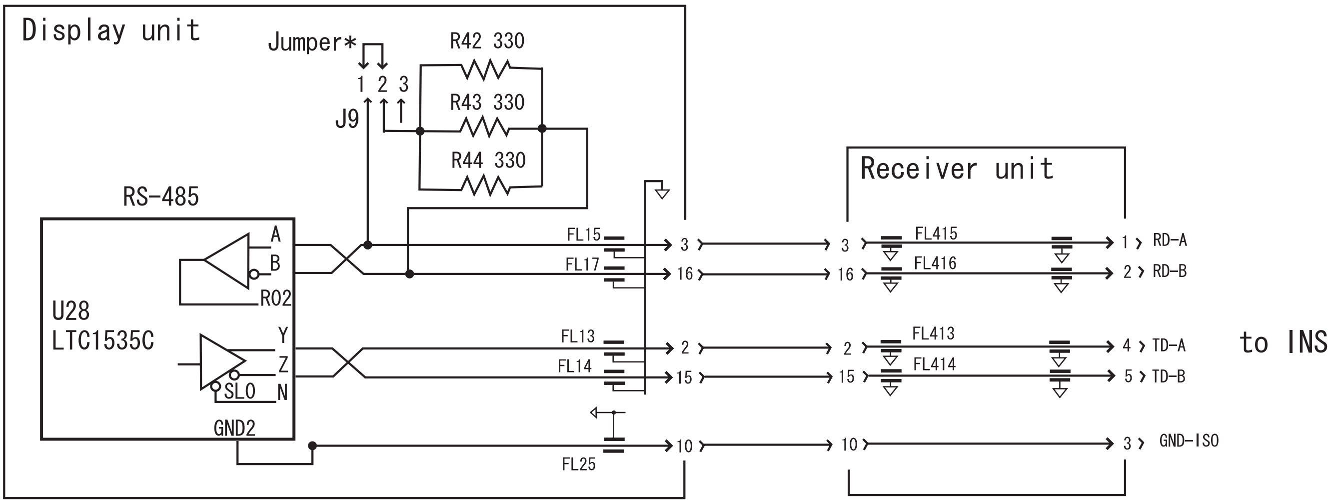

*When only NX-700A/B is listner for talker: Short #1 and 2 (default setting).
When multiple listners (including NX-700A/B) for talker: NX-700A/B is the end of bus; Short #1 and2.
Besides above; Short #2 and 3.

MENU TREE

- MENU/ESC Key
  - NAVTEX
    - Mask Mode (INS, ***Manual***)
    - Auto Rcv Mask (Off, ***On***)
    - Local Channel (***490kHz***, 4209.5kHz)
    - Rcv Mask
    - INS Output Mask
    - Printer Mask
  - System
    - Warn Msg Alm (***Off***, On)
    - Signal Monitor (***Off***, Int'l, Local)
    - Key Beep (Off, ***On***)
    - Time Offset (-13:30 to +13:30, ***0:00***)
    - Units (***nm, kt***, km, km/h, mi, mi/h)
    - Printer (None*, ***NX-700A***, Upright, Inverted) *: Default setting for NX-700B.
  - Display
    - Scrolling (***Slow***, Fast, Skip To $$)
    - Font Size (Small, ***Medium***, Large)
    - Time Display (***24hour***, 12hour)
    - Date Display (***MMM DD YYYY***, DD MMM YYYY, YYYY MMM DD)
    - User Display (***Off,*** Nav Data, Distance)
    - Speed Display (***SOG***, STW)
    - Contrast (0 to 9, ***5***)
    - User Select Station & Msg
  - Service
    - INS Input Speed (***4800***, 9600, 19200, 38400bps)
    - INS Output Speed (***4800***, 9600, 19200, 38400bps)
    - Print Header (Off, ***On***)
    - Edit Station List
    - Default Setting
    - Test
    - Rcv Monitor

- LIST key
  - All Messages
  - Alarm Messages
  - User Selected Messages
  - Good Messages
  - Lock Message

- PRINT key
  - Print
  - Cancel Print

SPECIFICATIONS OF NAVTEX RECEIVER NX-700A/B

1 NAVTEX RECEIVER

1.1	Receiving frequency	518 kHz and 490 kHz (or 4209.5 kHz), receive both frequencies simultaneously
1.2	Mode of reception	F1B
1.3	Sensitivity	2 μV e.m.f. (50 ohms), 4% error rate or less
1.4	Input protection	Withstands 30 Vrms for 15 minutes or more (w/ pre-amp unit)
1.5	Spurious emission	1nW or less
1.6	Message category	A: navigational warning B: meteorological warning C: ice report D: earch and rescue information/piracy and armed robbery E: meteorological forecast F: pilot message G: AIS H: LORAN-C message I: reserved presently not used J: SATNAV message K: ohter electronic navigational aid system message L: navigational warning (additional) M to Y: reserved presently not used Z: QRU (no message on hand)

2 DISPLAY UNIT

2.1	Display system	5-inch, 76 (W) x 100 (H) mm, monochrome LCD, 240 x 320 dots
2.2	Display modes	Message selection mode Message display mode
2.3	Message storage	200 messages x 2 channels (100,000 characters x 2 channels)

3 PRINTER SECTION (FOR NX-700A ONLY)

3.1	Printing system	Line thermal head printing system
3.2	Printing paper	Thermal paper (58 mm x 30 m)
3.3	Printing width	48 mm
3.4	Character format	24 x 12 dot
3.5	Dot pitch	8 dots/ mm
3.6	Number of characters	32 characters/line
3.7	Print speed	Approx. 20 mm/sec.

4 ANTENNA UNIT

4.1	Antenna type	NX-7H: H-field antenna
4.2	Output impedance	50 ohms
4.3	Power supply	+7 V to +9 V (thru co-ax cable)

5 INTERFACE

5.1	Input data	IEC61162-1, -2 GGA, GLL, RMC, ZDA, ACK, GNS, VHW, VTG, VBW, NRM, CRQ, PFEC
5.2	Output data	NRX, ALR, NRM
5.3	Alarm	Normal close, contact closure signal (floating, max. 80 mA, 50 V) for SAR alert

6 POWER SUPPLY

6.1	NX-700A	12-24VDC: 1.5-0.8A
6.2	NX-700B	12-24VDC: 0.7-0.4A

7 ENVIRONMENTAL CONDITION

7.1	Ambient temperature	
	Antenna unit	-25°C to +70°C
	Receiver / Display unit	-15°C to +55°C
7.2	Relative humidity	95% at 40°C (without dew condensation)
7.3	Waterproofing	
	Antenna unit	IP66
	Receiver / Display unit	IP20 (NX-700B: IP25 for front panel)
7.4	Vibration	- 2Hz to 5 Hz and up to 13.2 Hz with an excursion of ±1 mm ±10% (7 m/s^2 maximum acceleration at 13.2 Hz); - above 13.2 Hz and up to 100 Hz with a constant maximum acceleration of 7 m/s^2

8 COATING COLOR

8.1	Display unit	N3.0
8.2	Receiver unit	N3.0
8.3	Antenna unit	N9.5

PACKING LIST

NX-700A/NX-700A-HK/NX-700A-R

NAME	OUTLINE	DESCRIPTION/CODE №	Q'TY
ユニット	**UNIT**		
指示部 DISPLAY UNIT	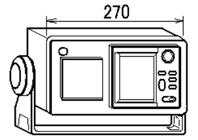	NX-700-A/-HK/-R 000-040-342-00 **	1
付属品	**ACCESSORIES**	**FP08-00800**	
感熱記録紙 RECORDING PAPER	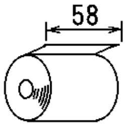	TP058-30CL 000-154-047-00	1
工事材料	**INSTALLATION MATERIALS**		
工事材料 INSTALLATION MATERIALS		CP08-01861 CP08-01861 004-515-280-00 004-514-350-00	1

1.ｺｰﾄﾞ番号末尾の[**]は、選択品の代表ｺｰﾄﾞを表します。
CODE NUMBER ENDING WITH "**" INDICATES THE CODE NUMBER OF REPRESENTATIVE MATERIAL.

型式/ｺｰﾄﾞ番号が2段の場合、下段より上段に代わる過渡期品であり、どちらかが入っています。 なお、品質は変わりません。

TWO TYPES AND CODES MAY BE LISTED FOR AN ITEM. THE LOWER PRODUCT MAY BE SHIPPED IN PLACE OF THE UPPER PRODUCT. QUALITY IS THE SAME.

(略図の寸法は、参考値です。 DIMENSIONS IN DRAWING FOR REFERENCE ONLY.)

PACKING LIST

NX-700B/NX-700B-HK/NX-700B-R

NAME	OUTLINE	DESCRIPTION/CODE №	Q'TY
ユニット	**UNIT**		
指示部 DISPLAY UNIT	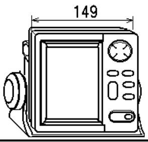	NX-700B/HK/R 000-152-663-00 **	1
工事材料	**INSTALLATION MATERIALS**	**CP08-01861**	
+ﾄﾗｽﾀｯﾋﾟﾝﾈｼﾞ 1ｼｭ SELF-TAPPING SCREW	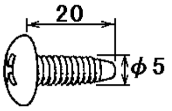	5X20 SUS304 000-162-608-10	4

1.ｺｰﾄﾞ番号末尾の[**]は、選択品の代表ｺｰﾄﾞを表します。
CODE NUMBER ENDING WITH "**" INDICATES THE CODE NUMBER OF REPRESENTATIVE MATERIAL.

型式/ｺｰﾄﾞ番号が2段の場合、下段より上段に代わる過渡期品であり、どちらかが入っています。 なお、品質は変わりません。

TWO TYPES AND CODES MAY BE LISTED FOR AN ITEM. THE LOWER PRODUCT MAY BE SHIPPED IN PLACE OF THE UPPER PRODUCT. QUALITY IS THE SAME.

(略図の寸法は、参考値です。 DIMENSIONS IN DRAWING FOR REFERENCE ONLY.)

PACKING LIST

08AW-X-9861 -2 1/1

NX-7001-AN*/BN*/-R

NAME	OUTLINE	DESCRIPTION/CODE №	Q'TY
ユニット	**UNIT**		
受信部 RECEIVER UNIT	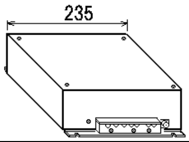	NX-7001-* 000-040-345-00 **	1
受信部予備品	**RECEIVER UNIT SPARE PARTS**		
予備品 SPARE PARTS	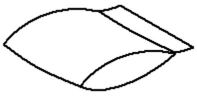	SP08-02101 SP08-02101 004-515-290-00 004-514-370-00	1
工事材料	**INSTALLATION MATERIALS**	CP08-01860	
ｹｰﾌﾞﾙ組品 CABLE ASSY.	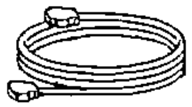 L=3M	DSUB25P-DSUB25P-3M 000-152-698-00	1
受信部工材	**RECEIVER UNIT INSTALLATION MATERIALS**		
工事材料 INSTALLATION MATERIALS	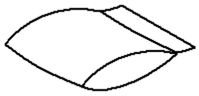	CP08-01863 CP08-01863 004-515-300-00 004-514-530-00	1
図書	**DOCUMENT**		
取扱説明書 OPERATOR'S MANUAL	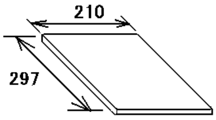	OM*-56490-*/56491-* 000-152-804-0* **	1 (*1)
操作要領書 OPERATOR'S GUIDE	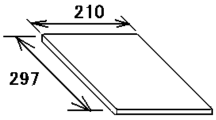	OS*-56490-* 000-152-805-0* **	1

1.ｺｰﾄﾞ番号末尾の[**]は、選択品の代表ｺｰﾄﾞを表します。
CODE NUMBER ENDING WITH "**" INDICATES THE CODE NUMBER OF REPRESENTATIVE MATERIAL.
(*1)印の図書型式「56491」はﾛｼｱ向け専用となります。
THE OPERATION'S MANUAL 56491 MARKED (*1)IS USED FOR RUSSIAN MODEL.

型式/ｺｰﾄﾞ番号が2段の場合、下段より上段に代わる過渡期品であり、どちらかが入っています。 なお、品質は変わりません。
TWO TYPES AND CODES MAY BE LISTED FOR AN ITEM. THE LOWER PRODUCT MAY BE SHIPPED IN PLACE OF THE UPPER PRODUCT. QUALITY IS THE SAME.
(略図の寸法は、参考値です。 DIMENSIONS IN DRAWING FOR REFERENCE ONLY.)

PACKING LIST

NX-7001-AA-*/BA*

NAME	OUTLINE	DESCRIPTION/CODE №	Q'TY
ユニット	**UNIT**		
受信部 RECEIVER UNIT	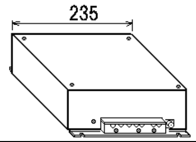	NX-7001-* 000-040-345-00 **	1
受信部予備品	**RECEIVER UNIT SPARE PARTS**		
予備品 SPARE PARTS	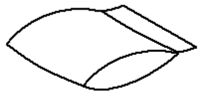	SP08-02101 SP08-02101 004-515-290-00 004-514-370-00	1
工事材料	**INSTALLATION MATERIALS**	**CP08-01860**	
ｹｰﾌﾞﾙ組品 CABLE ASSY.	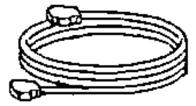 L=3M	DSUB25P-DSUB25P-3M 000-152-698-00	1
受信部工材	**RECEIVER UNIT INSTALLATION MATERIALS**		
工事材料 INSTALLATION MATERIALS		CP08-01864 CP08-01864 004-515-430-00 004-514-540-00	1
図書	**DOCUMENT**		
取扱説明書 OPERATOR'S MANUAL	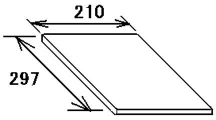	OM*-56490-* 000-152-803-0* **	1
操作要領書 OPERATOR'S GUIDE	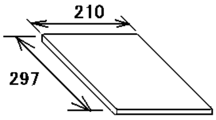	OS*-56490-* 000-152-805-0* **	1

1.ｺｰﾄﾞ番号末尾の[**]は、選択品の代表ｺｰﾄﾞを表します。
CODE NUMBER ENDING WITH "**" INDICATES THE CODE NUMBER OF REPRESENTATIVE MATERIAL.

型式/ｺｰﾄﾞ番号が2段の場合、下段より上段に代わる過渡期品であり、どちらかが入っています。 なお、品質は変わりません。
TWO TYPES AND CODES MAY BE LISTED FOR AN ITEM. THE LOWER PRODUCT MAY BE SHIPPED IN PLACE OF THE UPPER PRODUCT. QUALITY IS THE SAME.
(略図の寸法は、参考値です。 DIMENSIONS IN DRAWING FOR REFERENCE ONLY.)

PACKING LIST

08AW-X-9852 -0 1/1

NX-7H-0-10/-10-HK,NX-7H-0-20/-20-HK

NAME	OUTLINE	DESCRIPTION/CODE №	Q'TY
ユニット UNIT			
ｱﾝﾃﾅ ANTENNA	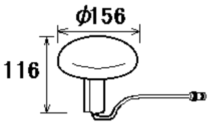	NX-7H* 000-040-214 **	1
工事材料 INSTALLATION MATERIALS		CP08-01810/01820	
工事材料 INSTALLATION MATERIALS	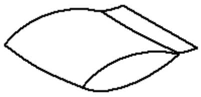	CP08-01811 004-514-610	1
ｹｰﾌﾞﾙ組品 CABLE ASSY.	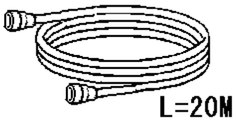	04S4168 *20M* 000-107-019	1 (*)
ｹｰﾌﾞﾙ組品 CABLE ASSY.	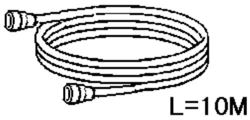	04S4168 *10M* 000-106-821	1 (*)

1.ｺｰﾄﾞ番号末尾の[**]は、選択品の代表ｺｰﾄﾞを表します。
CODE NUMBER ENDING WITH "**" INDICATES THE CODE NUMBER OF REPRESENTATIVE MATERIAL.
2.(*)印のｹｰﾌﾞﾙ組品は選択出来ます。
(*) MARKED CABLES ARE SELECTABLE.

（略図の寸法は、参考値です。 DIMENSIONS IN DRAWING FOR REFERENCE ONLY.）

CODE NO.	004-515-280-00	08AW-X-9401 -1
TYPE	CP08-01861	1/1

工事材料表

INSTALLATION MATERIALS

番号 NO.	名称 NAME	略図 OUTLINE	型名／規格 DESCRIPTIONS	数量 Q'TY	用途／備考 REMARKS
1	+ﾄﾗｽﾀｯﾋﾟﾝﾈｼﾞ 1種 SELF-TAPPING SCREW	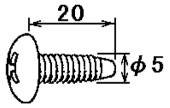	5X20 SUS304 CODE NO. 000-802-081-00	4	

型式/ｺｰﾄﾞ番号が２段の場合、下段より上段に代わる過渡期品であり、どちらかが入っています。　なお、品質は変わりません。

TWO TYPES AND CODES MAY BE LISTED FOR AN ITEM. THE LOWER PRODUCT MAY BE SHIPPED IN PLACE OF THE UPPER PRODUCT. QUALITY IS THE SAME.

（略図の寸法は、参考値です。　DIMENSIONS IN DRAWING FOR REFERENCE ONLY.）

08AW-X-9401

FURUNO

CODE NO.	004-515-300-00	08AW-X-9402 -3
TYPE	CP08-01863	1/1

工事材料表

INSTALLATION MATERIALS

番 号 NO.	名　称 NAME	略　図 OUTLINE	型名／規格 DESCRIPTIONS		数量 Q'TY	用途／備考 REMARKS
1	+ﾄﾗｽﾀｯﾋﾟﾝﾈｼﾞ　1ｼｭ SELF-TAPPING SCREW	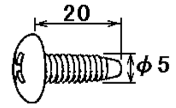	5X20 SUS304 CODE NO.	000-162-608-10	4	
2	同軸ﾌﾟﾗｸﾞ COAX.PLUG	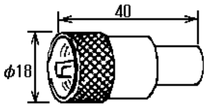	FM-MP-7 CODE NO.	000-161-293-10	2	
3	ｱﾀﾞﾌﾟﾀ REDUCER(S)	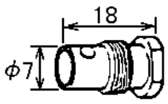	MP-M3A CODE NO.	000-161-295-10	2	
4	ｱﾀﾞﾌﾟﾀ REDUCER(L)	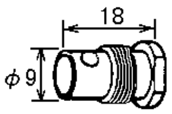	MP-M5A CODE NO.	000-161-296-10	2	

型式/ｺｰﾄﾞ番号が２段の場合、下段より上段に代わる過渡期品であり、どちらかが入っています。　なお、品質は変わりません。

TWO TYPES AND CODES MAY BE LISTED FOR AN ITEM. THE LOWER PRODUCT MAY BE SHIPPED IN PLACE OF THE UPPER PRODUCT. QUALITY IS THE SAME.

（略図の寸法は、参考値です。　DIMENSIONS IN DRAWING FOR REFERENCE ONLY.）

FURUNO

CODE NO.	004-515-430-00	08AW-X-9403 -3
TYPE	CP08-01864	1/1

工事材料表

INSTALLATION MATERIALS

番号 NO.	名称 NAME	略図 OUTLINE	型名／規格 DESCRIPTIONS	数量 Q'TY	用途／備考 REMARKS
1	+ﾄﾗｽﾀｯﾋﾟﾝﾈｼﾞ 1ｼｭ SELF-TAPPING SCREW	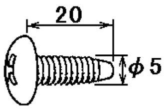	5X20 SUS304 CODE NO. 000-162-608-10	4	
2	同軸ﾌﾟﾗｸﾞ COAX.PLUG	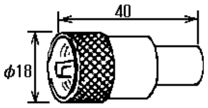	FM-MP-7 CODE NO. 000-161-293-10	1	

型式/ｺｰﾄﾞ番号が２段の場合、下段より上段に代わる過渡期品であり、どちらかが入っています。 なお、品質は変わりません。

TWO TYPES AND CODES MAY BE LISTED FOR AN ITEM. THE LOWER PRODUCT MAY BE SHIPPED IN PLACE OF THE UPPER PRODUCT. QUALITY IS THE SAME.

（略図の寸法は、参考値です。 DIMENSIONS IN DRAWING FOR REFERENCE ONLY.）

FURUNO

CODE NO.		08AW-X-9407 -1
TYPE		1/1

工事材料表
INSTALLATION MATERIALS

NX-700A/B

番号 NO.	名称 NAME	略図 OUTLINE	型名／規格 DESCRIPTIONS	数量 Q'TY	用途／備考 REMARKS
1	ケーブル組品 CABLE ASSY.	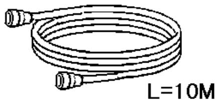	04S4168 *10M* CODE NO. 000-106-821	1	選択 TO BE SELECT
2	ケーブル組品 CABLE ASSY.	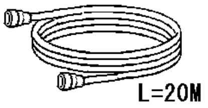	04S4168 *20M* CODE NO. 000-107-019	1	選択 TO BE SELECT
3	ケーブル組品 CABLE ASSY.	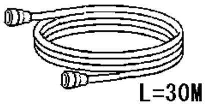	04S4168 *30M* CODE NO. 000-107-020	1	選択 TO BE SELECT
4	ケーブル組品 CABLE ASSY.	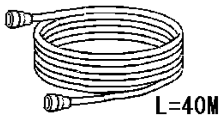	04S4168 *40M* CODE NO. 000-107-021	1	選択 TO BE SELECT
5	ケーブル組品 CABLE ASSY.	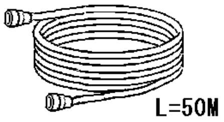	04S4168 *50M* CODE NO. 000-107-022	1	選択 TO BE SELECT

08AW-X-9407

FURUNO ELECTRIC CO ., LTD.

(略図の寸法は、参考値です。 DIMENSIONS IN DRAWING FOR REFERENCE ONLY.)

CODE NO.	004-514-610-00	08AW-X-9404 -1
TYPE	CP08-01811	1/1

工事材料表

INSTALLATION MATERIALS

番 号 NO.	名 称 NAME	略 図 OUTLINE	型名／規格 DESCRIPTIONS	数量 Q'TY	用途／備考 REMARKS
1	絶縁ﾃｰﾌﾟ SELF-BONDING TAPE	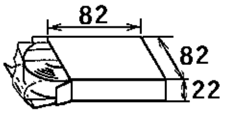	Uﾃｰﾌﾟ 0.5X19X5M Uﾃｰﾌﾟ 0.5X19X5M CODE NO. 000-165-833-10 000-800-985-00	1	

型式/ｺｰﾄﾞ番号が２段の場合、下段より上段に代わる過渡期品であり、どちらかが入っています。　なお、品質は変わりません。

TWO TYPES AND CODES MAY BE LISTED FOR AN ITEM. THE LOWER PRODUCT MAY BE SHIPPED IN PLACE OF THE UPPER PRODUCT. QUALITY IS THE SAME.

（略図の寸法は、参考値です。　DIMENSIONS IN DRAWING FOR REFERENCE ONLY.）

FURUNO

CODE NO.	004-515-290-00	08AW-X-9301 -2 1/1
TYPE	SP08-02101	BOX NO. P

SHIP NO.	SPARE PARTS LIST FOR	U S E	SETS PER VESSEL

ITEM NO.	NAME OF PART	OUTLINE	DWG. NO. OR TYPE NO.	QUANTITY WORKING PER SET	QUANTITY WORKING PER VES	QUANTITY SPARE	REMARKS/CODE NO.
1	ﾋｭｰｽﾞ FUSE	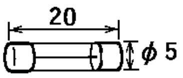	FGMB 125V 2A PBF			1	000-157-479-10

MFR'S NAME	FURUNO ELECTRIC CO.,LTD.	DWG NO.	08AW-X-9301	1/1

（略図の寸法は、参考値です。 DIMENSIONS IN DRAWING FOR REFERENCE ONLY.)

型式/ｺｰﾄﾞ番号が２段の場合、下段より上段に代わる過渡期品であり、どちらかが入っています。 なお、品質は変わりません。

TWO TYPES AND CODES MAY BE LISTED FOR AN ITEM. THE LOWER PRODUCT MAY BE SHIPPED IN PLACE OF THE UPPER PRODUCT. QUALITY IS THE SAME.

FURUNO

表 1 TABLE 1

寸法区分（mm） DIMENSIONS	公差（mm） TOLERANCE
L≦50	±1.5
50<L≦100	±2.5
100<L≦500	±3

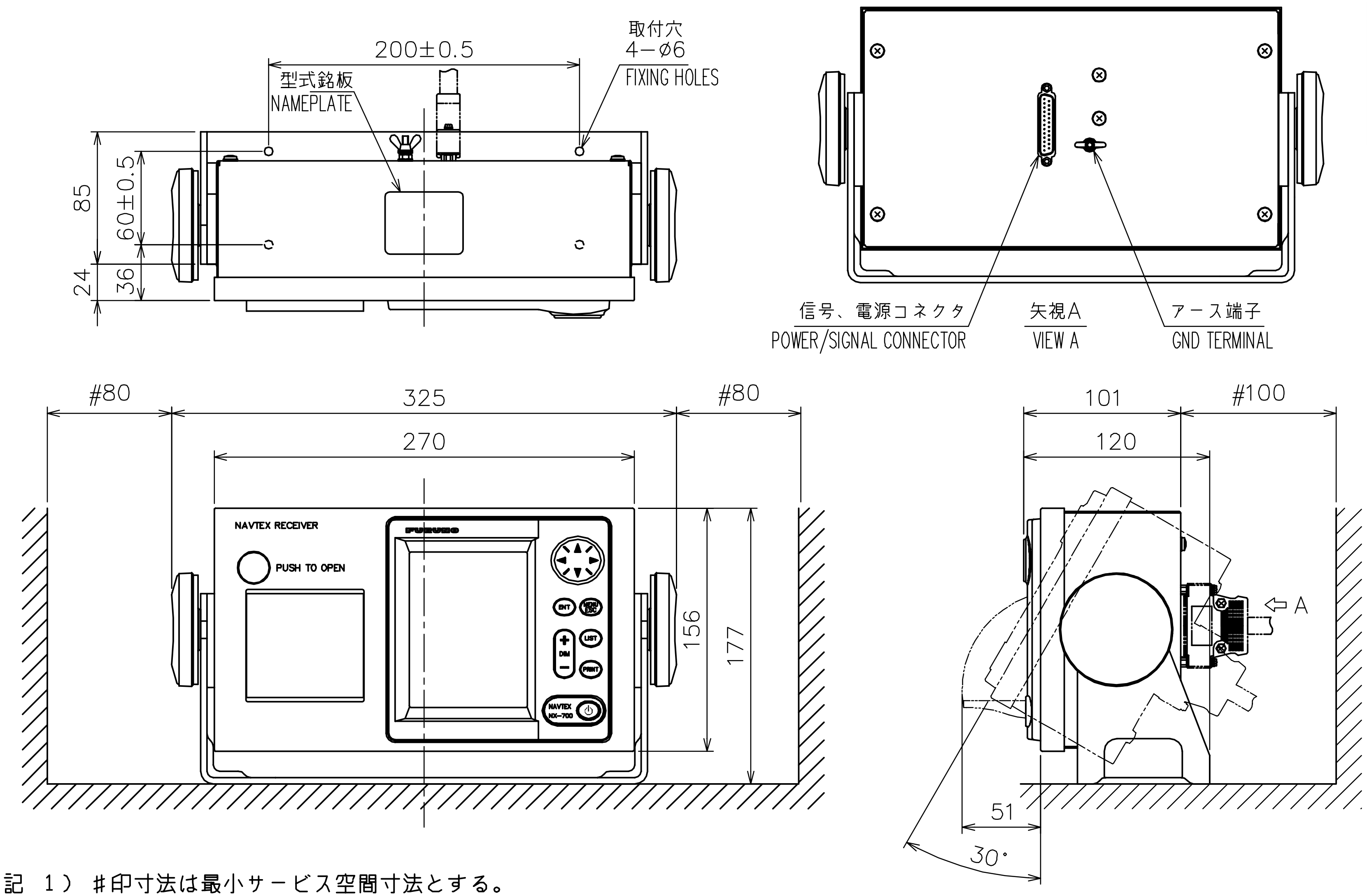

注 記 1）＃印寸法は最小サービス空間寸法とする。
2）指定外の寸法公差は表１による。
3）取付用ネジはトラスタッピンネジ呼び径５×２０を使用のこと。

NOTE
1. #: MINIMUM SERVICE CLEARANCE.
2. TABLE 1 INDICATES TOLERANCE OF DIMENSIONS WHICH IS NOT SPECIFIED.
3. USE SELF-TAPPING SCREWS 5x20 FOR FIXING THE UNIT.

DRAWN	MAY 16, '05 E.MIYOSHI	TITLE	NX-700A
CHECKED	T.TAKAHASHI	名称	指示部（卓上装備、プリンタ組込型）
APPROVED	NX-700		外寸図
SCALE 1/4	MASS 3.3 kg ±10%	NAME	DISPLAY UNIT (TABLETOP MOUNT W/ PRINTER)
DWG.No. C5649-G01-B	08-023-100G-2		OUTLINE DRAWING

FURUNO ELECTRIC CO., LTD.

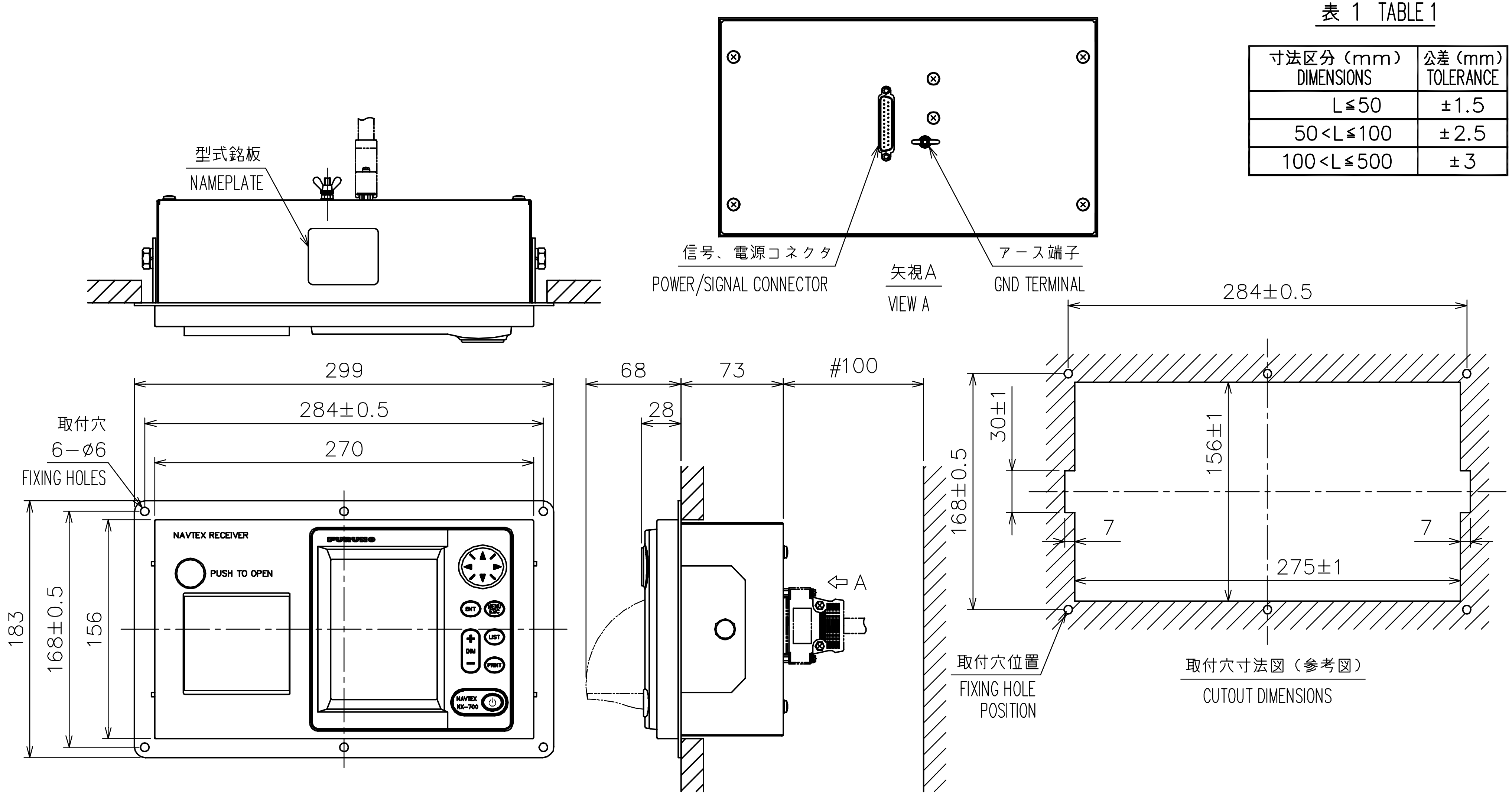

表 1 TABLE 1

寸法区分（mm） DIMENSIONS	公差（mm） TOLERANCE
L≦50	±1.5
50＜L≦100	±2.5
100＜L≦500	±3

注 記 1）＃印寸法は最小サービス空間寸法とする。
2）指定外の寸法公差は表1による。
3）取付用ネジはトラスタッピンネジ呼び径５×２０を使用のこと。

NOTE
1. #: MINIMUM SERVICE CLEARANCE.
2. TABLE 1 INDICATES TOLERANCE OF DIMENSIONS WHICH IS NOT SPECIFIED.
3. USE SELF-TAPPING SCREWS 5 x 20 FOR FIXING THE UNIT.

DRAWN	Mar. 29, '05 E.MIYOSHI	TITLE	NX-700A
CHECKED	T.TAKAHASHI	名称	指示部(埋込装備、プリンタ組込型) 外寸図
APPROVED	Y. Hatai	NX-700	
SCALE	1/4 MASS 3.1 ±10% kg	NAME	DISPLAY UNIT (FLUSH MOUNT W/ PRINTER) OUTLINE DRAWING
DWG.No.	C5649-G04-A	08-023-110G-4	

FURUNO ELECTRIC CO., LTD.

FURUNO

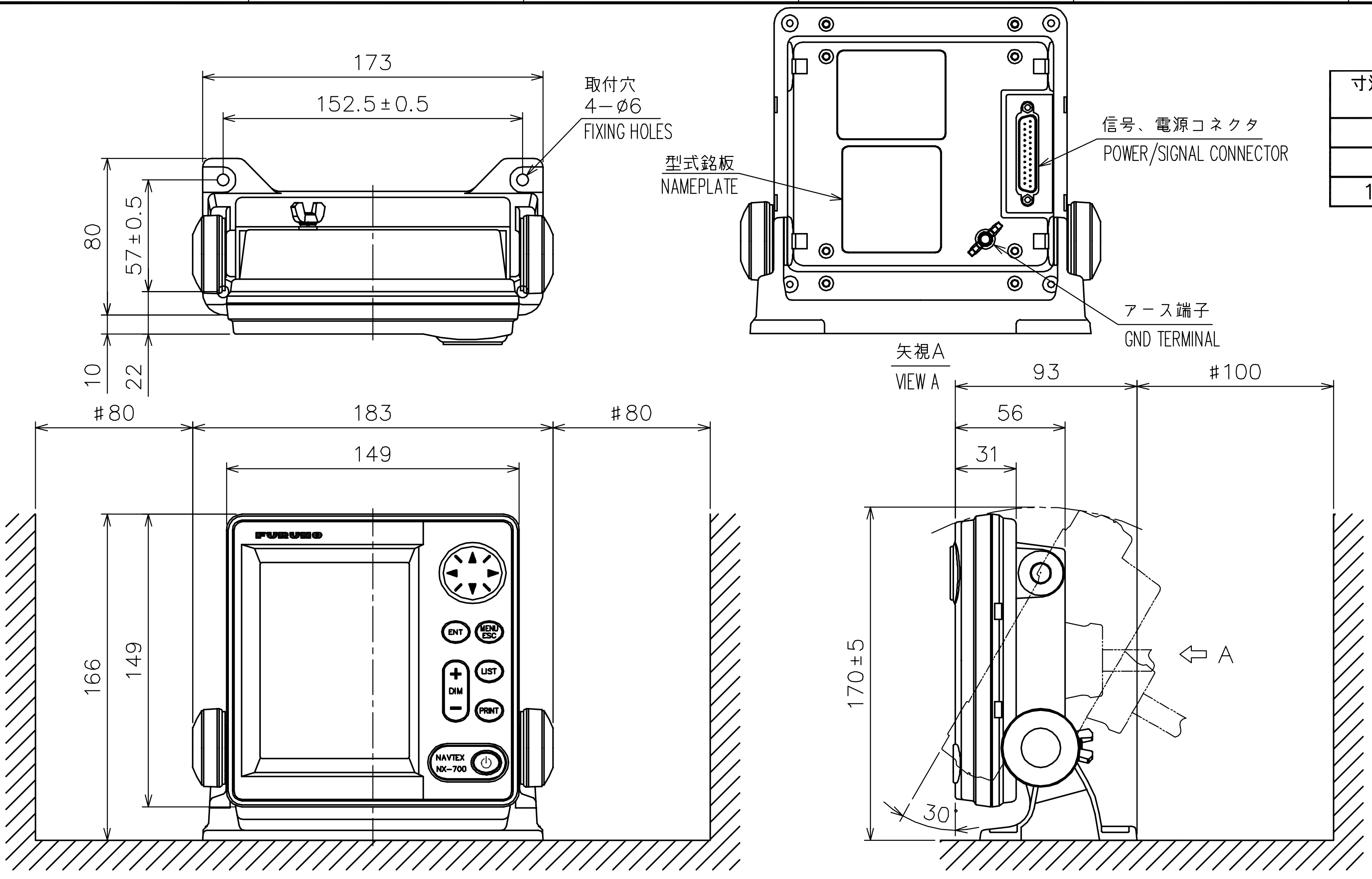

表 1 TABLE 1

寸法区分 (mm) DIMENSIONS	公差 (mm) TOLERANCE
L≦50	±1.5
50<L≦100	±2.5
100<L≦500	±3

注 記
1) #印寸法は最小サービス空間寸法とする。
2) 指定外の寸法公差は表1による。
3) 取付用ネジはトラスタッピンネジ呼び径5×20を使用のこと。

NOTE
1. #: MINIMUM SERVICE CLEARANCE.
2. TABLE 1 INDICATES TOLERANCE OF DIMENSIONS WHICH IS NOT SPECIFIED.
3. USE SELF-TAPPING SCREWS 5 x 20 FOR FIXING THE UNIT.

DRAWN	MAY 16, '05 E.MIYOSHI	TITLE	NX-700B
CHECKED	T.TAKAHASHI	名称	指示部(卓上装備、LCD単体型)
APPROVED	NX-700		外寸図
SCALE 1/3	MASS 0.7 ±10% kg	NAME	DISPLAY UNIT (TABLETOP MOUNT W/O PRINTER)
DWG.No. C5649-G05-B	08-023-200G-1		OUTLINE DRAWING

FURUNO ELECTRIC CO., LTD.

FURUNO

表 1 TABLE 1

寸法区分 (mm) DIMENSIONS	公差 (mm) TOLERANCE
L≦50	±1.5
50＜L≦100	±2.5
100＜L≦500	±3

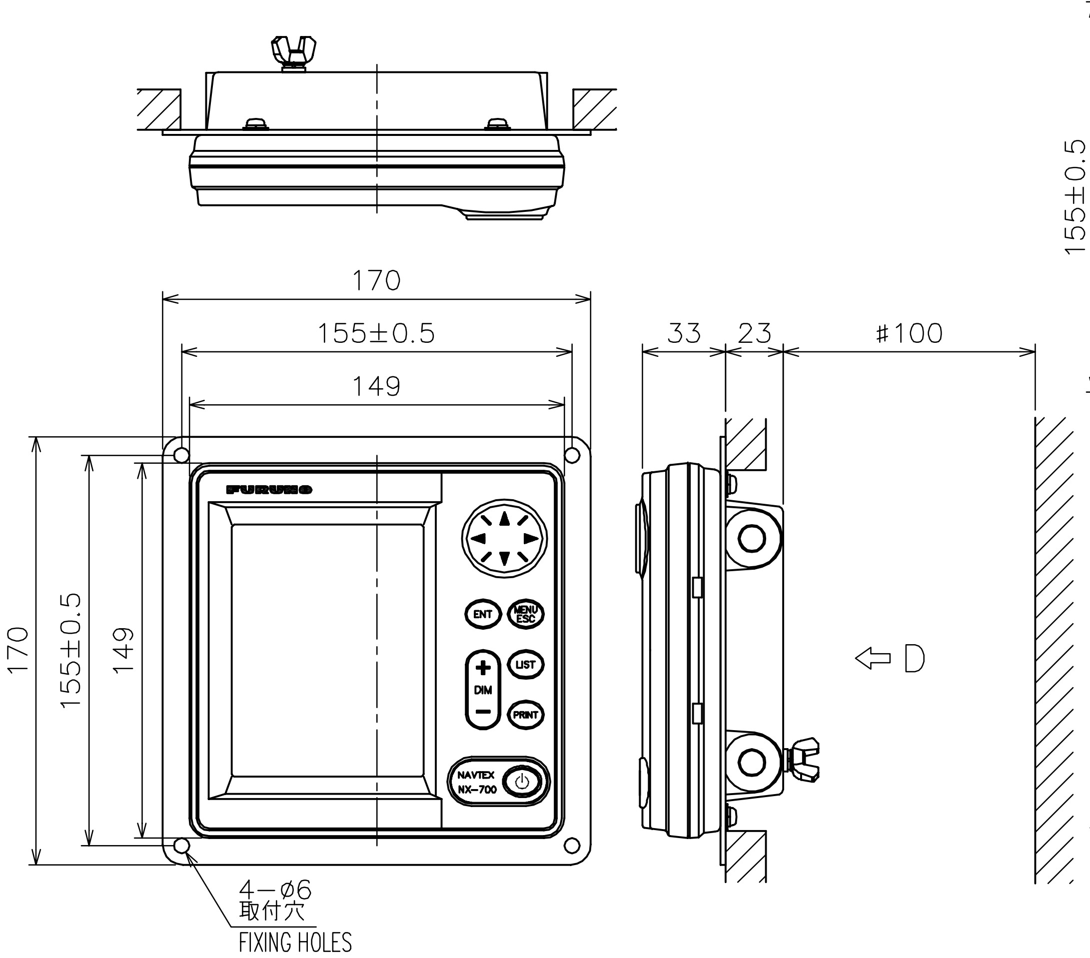

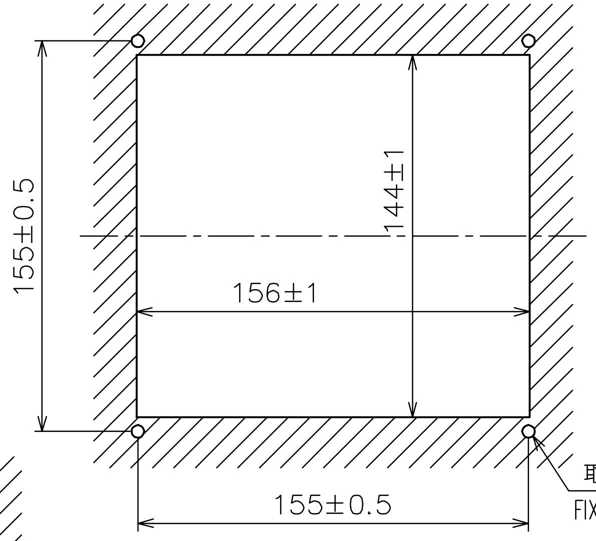

取付穴寸法図（参考図）
CUTOUT DIMENSIONS

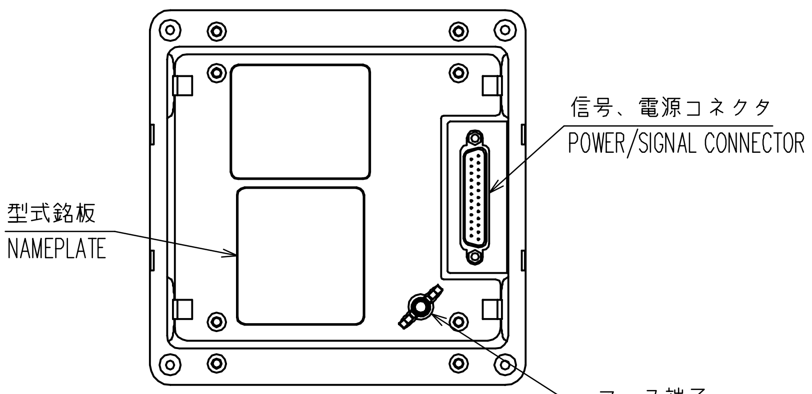

矢視D
VIEW D

注記
1） 指定外の寸法公差は表１による。
2） ＃印寸法は最小サービス空間寸法とする。
3） 取付用ネジはトラスタッピンネジ呼び径５×２０を使用のこと。

NOTE
1. TABLE 1 INDICATES TOLERANCE OF DIMENSIONS WHICH IS NOT SPECIFIED.
2. #: MINIMUM SURVICE CLEARANCE.
3. USE SELF-TAPPING SCREWS 5x20 FOR FIXING THE UNIT.

DRAWN	MAY 16, '05 E.MIYOSHI	TITLE	NX-700B
CHECKED	T.TAKAHASHI	名称	指示部（埋込装備、LCD単体型）
APPROVED	NX-700		外寸図
SCALE 1/3	MASS 0.7 kg ±10%	NAME	DISPLAY UNIT (FLUSH MOUNT W/O PRINTER)
DWG.No. C5649-G07-B	08-023-220G-1		OUTLINE DRAWING

FURUNO ELECTRIC CO., LTD.

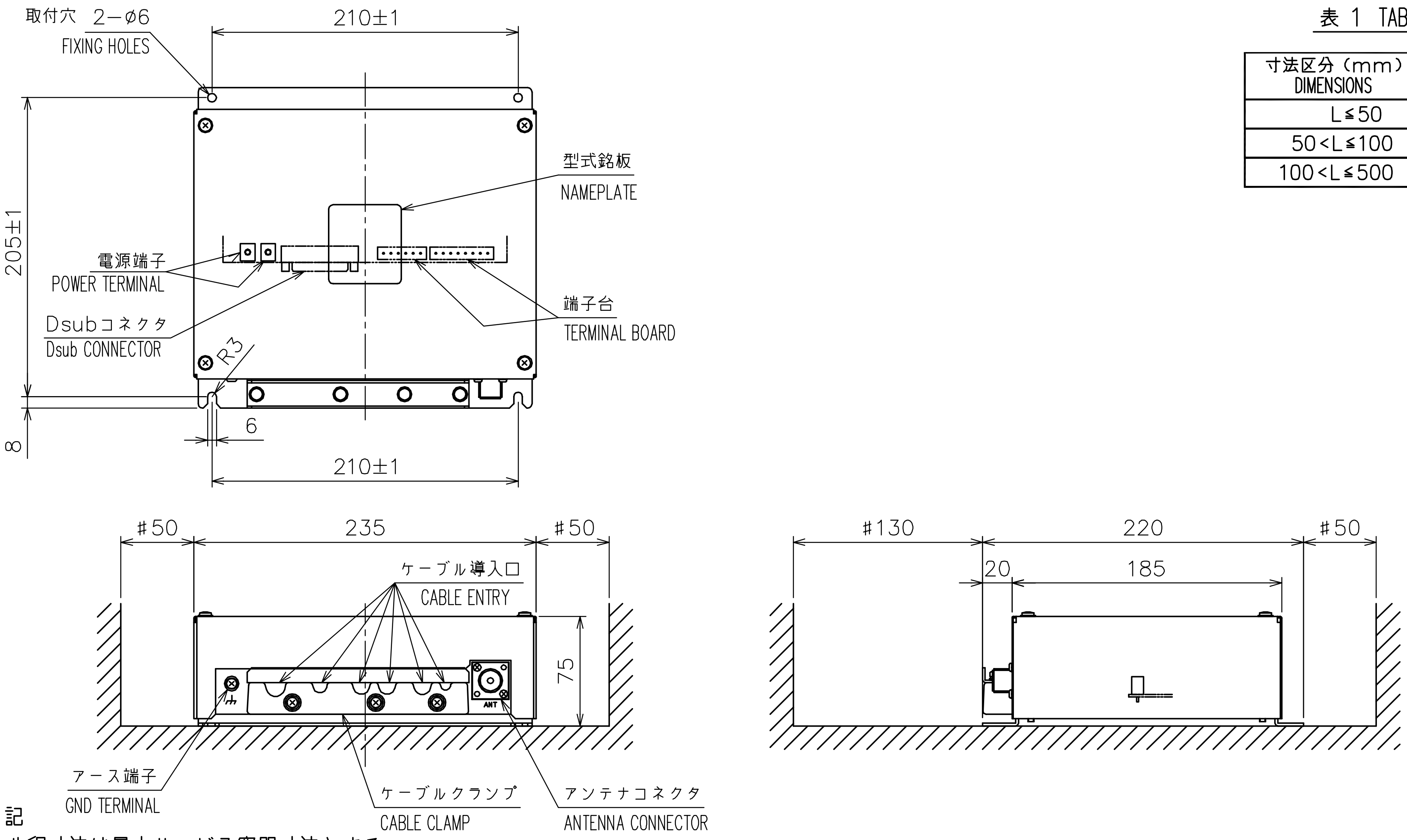

表 1 TABLE 1

寸法区分（mm） DIMENSIONS	公差（mm） TOLERANCE
L≦50	±1.5
50＜L≦100	±2.5
100＜L≦500	±3

注 記

1） #印寸法は最小サービス空間寸法とする。

2） 指定外の寸法公差は表１による。

3） 取付用ネジはトラスタッピンネジ呼び径５×２０を使用のこと。

NOTE

1. #: MINIMUM SERVICE CLEARANCE.
2. TABLE 1 INDICATES TOLERANCE OF DIMENSIONS WHICH IS NOT SPECIFIED.
3. USE SELF-TAPPING SCREWS 5x20 FOR FIXING THE UNIT.

DRAWN Mar. 25, '05 E.MIYOSHI		TITLE	NX-7001
CHECKED T.TAKAHASHI		名称	受信部
APPROVED Y. Hatai	NX-700		外寸図
SCALE 1/4 MASS 2.0 ±10% kg		NAME	RECEIVER UNIT
DWG.No. C5649-G03-A	08-023-300G-1		OUTLINE DRAWING

FURUNO ELECTRIC CO., LTD.

FURUNO

A)マストへの取付け　MAST MOUNTING

a)マスト取付金具CP20-01111(工事材料)でマストに固定する。
USE MAST MOUNTING KIT CP20-01111.

b)パイプのみを使うとき
USE A PIPE ONLY.

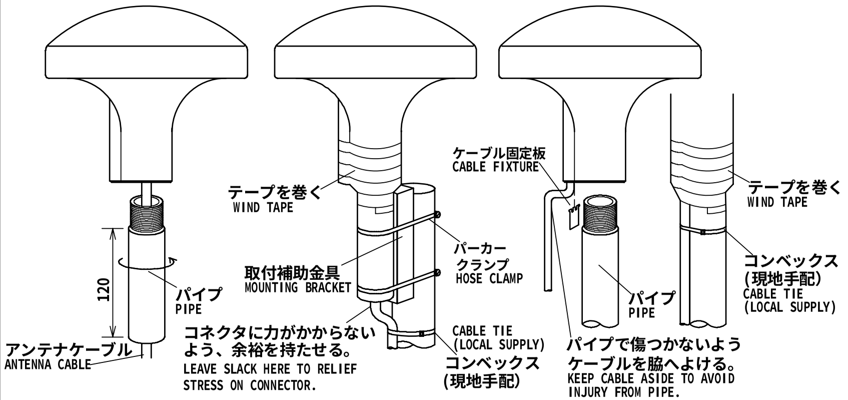

B)スタンションやパルピットにつけるとき　HANDRAIL MOUNTING

レール用アンテナベース No.13-RC5160 (取付可能レール直径：φ19～φ32)
(コード番号：000-806-114)

USE HANDRAIL MOUNTING BASE No.13-RC5160
(CODE No.000-806-114, OPTION).
THE DIAMETER OF THE HANDRAIL SHOULD BE FROM
φ19mm TO φ32mm.

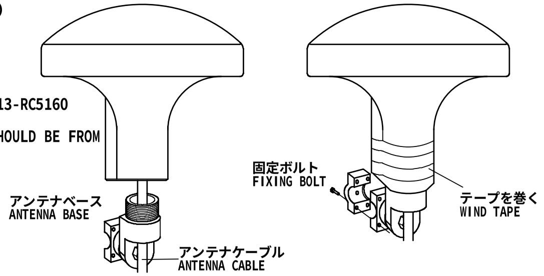

注記 1) パイプ(アンテナベース)はアンテナユニットにねじ込んだ後に固定する。
2) アンテナを固定するときはパイプ（アンテナベース）をアンテナにねじ込むこと。
アンテナ側をねじるとコネクタ部やケーブルに無理がかかり、故障の原因となる。

NOTE 1. FASTEN PIPE(ANTENNA BASE) TO ANTENNA UNIT FIRST THEN FIX THEM TO MAST OR HANDRAIL.
2. WHEN FIXING ANTENNA, TURN PIPE OR ANTENNA BASE; NOT THE ANTENNA.
TURNING THE ANTENNA MAY TWIST THE CABLE AND PLACE STRESS ON CONNECTOR.

C)取付ける場所が傾斜しているとき　ANTENNA BASE MOUNTING

オプションのアンテナベースを使う。
USE OPTIONAL ANTENNA BASE No.13-QA330/QA310.

傾斜 INCLINATION	-5° - 33°	32° - 65°	65° - 98°
装備方法 MOUNTING METHOD	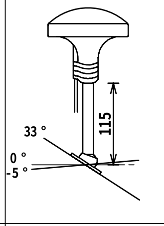	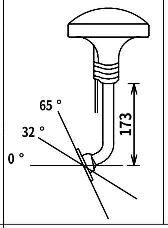	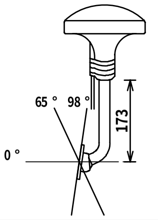
アンテナベース型式 ANTENNA BASE TYPE	直型アンテナベース RIGHT ANGLE ANTENNA BASE No.13-QA330	L型アンテナベース L-TYPE ANTENNA BASE No.13-QA310	
コード番号 CODE No.	000-803-239	000-803-240	

アンテナベース基部
MOUNTING DIMENSIONS OF ANTENNA BASE

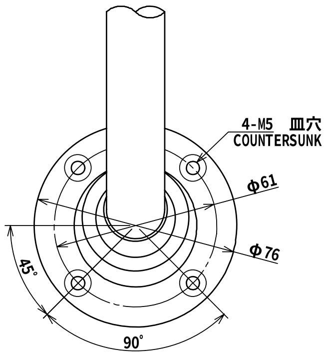

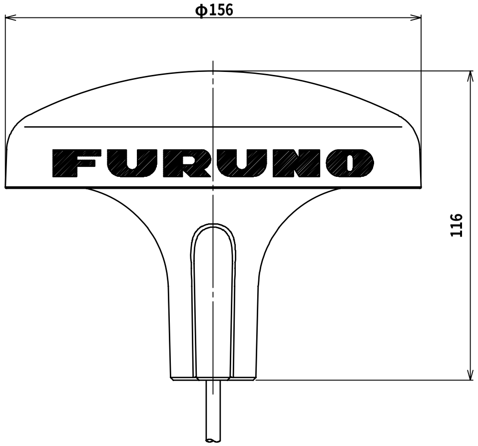

1-14UNS1B
ねじ山数(25.4mmにつき)： 14
ピッチ： 1.8143 mm
オネジ有効長さ： 15.17 mm
オネジ有効径： 24.17 mm

THREAD PER 25.4mm (1 INCH): 14
PITCH: 1.8143 mm
THREAD LENGTH: 15.17 mm
PITCH DIAMETER: 24.17 mm

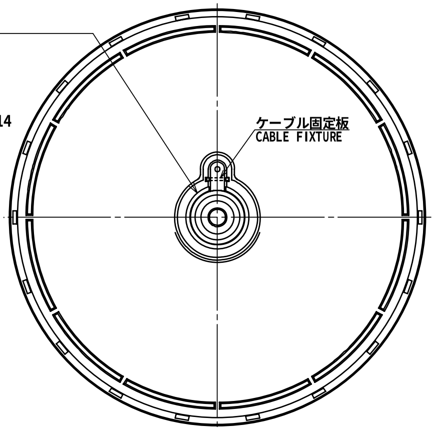

表 1　TABLE 1

寸法区分(mm) DIMENSIONS	公差(mm) TOLERANCE
0 ＜ L ≦ 50	±１．５
50 ＜ L ≦ 100	±２．５
100 ＜ L ≦ 500	±３

表 2　TABLE 2

型式 TYPE	質量(kg) MASS(±10%)
NX-3H-D(NX-300)	0.94
NX-7H(NX-700)	0.6

取付位置
MOUNTING LOCATION

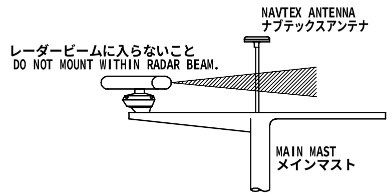

注記　1）指定外の寸法公差は表1による。
NOTE　1. TABLE 1 INDICATES TOLERANCE OF DIMENSIONS WHICH IS NOT SPECIFIED.

DRAWN Oct. 13, '05	E.MIYOSHI	TITLE	NX-3H-D/NX-7H
CHECKED	TAKAHASHI.T	名称	空中線部/アンテナ部
APPROVED	Y. Hatai	NX-700 NX-300	外寸図
SCALE 1/2	MASS 表2参照 SEE TABLE 2.	質量は10mケーブルを含む。 MASS W/ 10m CABLE.	NAME ANTENNA UNIT
DWG. No.	C5629-G05- F	08-021-310G- 1	OUTLINE DRAWING

FURUNO ELECTRIC CO., LTD.

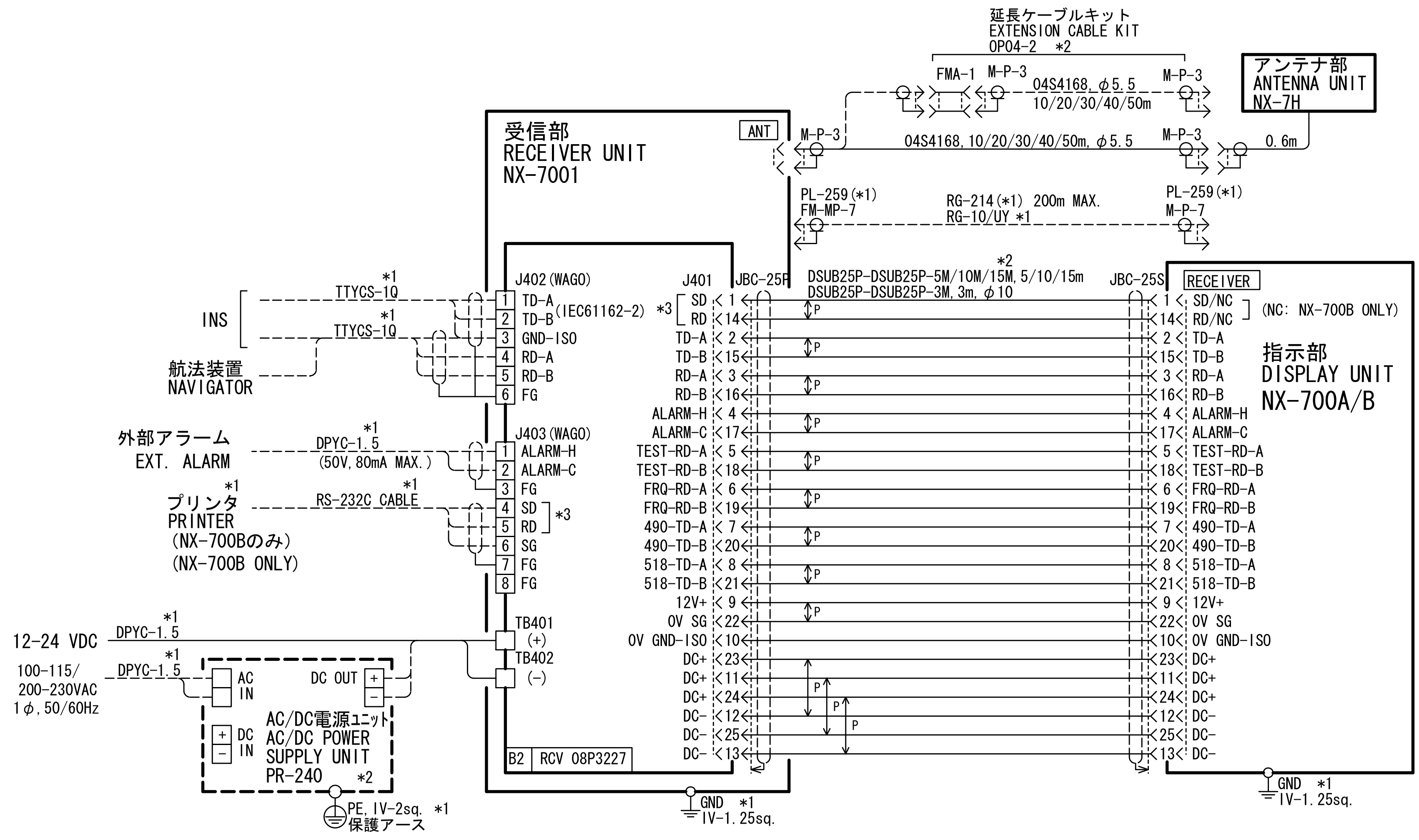

注記
＊１）造船所手配。
＊２）オプション。
＊３）プリンタ信号出力はメニューにて選択。

NOTE
*1. SHIPYARD SUPPLY.
*2. OPTION.
*3. SELECT OUTPUT OF PRINTER SIGNAL FROM MENU.

DRAWN	May 15 '07 T.YAMASAKI		TITLE	NX-700A/B
CHECKED	May 15 '07 T.TAKENO		名 称	ナブテックス受信機
APPROVED	May 17'07 R.Esumi			相互結線図
SCALE	MASS		NAME	NAVTEX RECEIVER
DWG. No.	C5649-C01- G	08-001-3157-A		INTERCONNECTION DIAGRAM

FURUNO ELECTRIC CO., LTD.

INDEX

A

Alarm message 2-9

C

Contrast 2-18

D

Date 2-21
Default Settings 3-6
Diagnostics 3-5

F

Font Size 2-18
Frequency 2-8

I

Icons 2-15
Input Speed 2-19

K

Keys 2-1
Key Beep 2-17

L

LCD dimmer 2-2

M

Maintenance 3-1
Menu Tree AP-1
Message
  Sample 2-4
  Format 1-2
  List 2-16
  New 2-3
  Processing 2-9

N

NAVTEX 1-1
NAVTEX Station Map 1-3
NAVTEX Station List 1-4
  Adding 2-12
  Deleting 2-14
  Editing 2-14

O

Output Speed 2-19

P

Power 2-1
Printer Setting 4-10
Printing 2-10
  all messages 2-10
  canceling 2-11
  each messages 2-11
Print header 2-19
Protecting 2-10

R

Rcv Monitor 2-19
Receive Mode 2-5
Replacement 3-2

S

Scrolling 2-18
Speed Display 2-18

T

Time Display 2-18
Time Offset 2-17
Troubleshooting 3-4

U

Units 2-17

FURUNO ELECTRIC CO., LTD.
9-52 Ashihara-Cho, Nishinomiya City, 662-8580, Hyogo, Japan
Tel: +81 798-65-2111 Fax: +81 798-65-4200

Pub No. DOC-954

Declaration of conformity

0560

We FURUNO ELECTRIC CO., LTD.

(Manufacturer)

9-52 Ashihara-Cho, Nishinomiya City, 662-8580, Hyogo, Japan

(Address)

hereby declare under our sole responsibility that the product

NAVTEX receiver Types: NX-700A (display with printer) and NX-700B (display only) consisting of Display unit NX-700-A (for NX-700A) or NX-700-B (for NX-700B), Receiver unit NX-7001, Active ferrite loop antenna NX-7H and optional Power supply unit PR-240

(Model names, type numbers)

to which this declaration relates conforms to the following standard(s) or normative document(s)

IMO Resolution MSC.148(77)	IEC 61097-6 2nd edition: 2005-12
IMO Resolution A.694(17)	EN 61162-1: 2000-07 (IEC 61162-1 2nd edition: 2000-07)
ITU-R Recommendation M.540-2	EN 61162-2: 1998-09 (IEC 61162-2 1st edition: 1998-09)
ITU-R Recommendation M.625-3	EN 60945: 2002 (IEC 60945 4th edition: 2002-08)

(title and/or number and date of issue of the standard(s) or other normative document(s))

For assessment, see

- EC type-examination (Module B) certificate N° 05212003/AA/02 of 16 May 2007 issued by Telefication, The Netherlands
- Production Quality System (Module D) certificate No. P 112 of 20 May 2005 issued by Telefication, The Netherlands
- Test reports 99624530 of 25 May 2005 and 99770230 of 6 July 2006 prepared by Telefication, The Netherlands
- Test Report No. FLI 12-05-020 of 17 May 2005 prepared by Furuno Labotech International Co., Ltd., Nishinomiya, Japan

This declaration is issued according to the provisions of European Council Directive 96/98/EC on marine equipment modified by Commission Directive 98/85/EC and amended by the Commission Directive 2002/75/EC.

On behalf of Furuno Electric Co., Ltd.

Hiroaki Komatsu
Manager,
International Rules and Regulations

(name and signature or equivalent marking of authorized person)

Nishinomiya City, Japan
May 21, 2007

(Place and date of issue)